OFFICIAL PROCEEDINGS OF THE
COUNCIL OF THE PARISH OF
ST. MARY, STATE OF LOUISIANA

NOVEMBER 18, 2015
FRANKLIN, LOUISIANA

The St. Mary Parish Council met on this date in Regular Session with Chairman Kevin Voisin presiding and the following members present: Lionel Metz, Edna Middleton, David Hanagriff, Glen Hidalgo, Ken Singleton, Logan Fromenthal, Dr. Tim Tregle, Steve Bierhorst and Albert Foulcard. Absent was Sterling Fryou.

Mr. Hanagriff pronounced the Invocation and Mr. Hidalgo led the Pledge of Allegiance.

Mr. Metz moved that the reading of the minutes of the First Regular Meeting, November 11, 2015 be dispensed with and that the same be approved. Mr. Singleton seconded the motion, which carried.

Mr. Foulcard commented relative to an article in the Franklin-Banner Tribune regarding Gary LaGrange, CEO, Port of New Orleans (former West St. Mary Port Director).

Mr. LaGrange received the 2015 McCullough Award at the National Industrial Transportation League's 108th annual meeting.

Mr. Foulcard requested that a letter of commendation be forwarded to Mr. LaGrange acknowledging his recipient of the 2015 McCullough Award.

Mr. Bogan, 7413 Hwy. 182 Verdunville, La appeared before the Parish Council to inform that the 19th Annual Centerville/Verdunville Veterans/Senior Dinner will be held on December 5, 2015 at the KC Hall in Centerville. (Mr. Bogan requested a donation from each Council member for the dinner.)

In regard to the 4th Annual Veteran's Luncheon that was held on November 5, 2015 at the Franklin Recreation Center, Mr. Bogan asked that the Franklin Recreation Center be considered as the site for the luncheon yearly in lieu of rotating between the City of Morgan City site.

Following comments, Dr. Tregle asked that the Annual Veteran's Luncheon be allowed to continue being rotated between Franklin and Morgan City.

In regard to drivers being paid to drive the V. A. van to transport veterans to and from New Orleans for office visits, Mr. Naquin informed that he was advised by the Parish's Legal Advisor that the drivers would have to be placed on the Parish's payroll as an employee of the Parish.

Mr. Naquin further explained that the Legal Advisor stated that employing paid drivers for the Veteran's Administration van could possibly become a liability to the Parish.

Mr. Naquin, Parish President had no report on this date for the Parish Council.

Henry "Bo" LaGrange, Chief Administrative Officer presented his report for a one (1) week period ending November 18, 2015.

Item 1 in Mr. LaGrange's report stated, "The Federal Emergency Management Agency has written to advise that in accordance with FEMA's new Expanded Appeals Process for the Revised Preliminary FIRMS and Flood Insurance Study reports, FEMA has published a notice of the proposed flood hazard determinations in the Federal Register and will publish a public notification concerning the appeal process in the Franklin Banner-Tribune and the Morgan City

Daily Review on or about November 23rd, 2015 and November 30th, 2015. FEMA will also publish a separate notice of the flood hazard determinations on the "Flood Hazard Determinations on the Web" portion of the FEMA website. During the 90-day appeal period following the second publication of the public notification, any owner or lessee of real property in our community (St. Mary unincorporated) who believes his or her property rights will be adversely affected by the proposed flood hazard determinations may appeal to St. Mary Parish Government. The appeal data must be submitted to FEMA during the 90'day appeal period. Only appeals of the proposed flood hazard determinations supported by scientific or technical data can be considered before FEMA makes it final flood hazard determination at the end of the 90-day appeal period."

Mr. LaGrange informed that the advertisement will be published on November 23 and November 30, 2015.

Public meetings will be planned and held for the general public to view the preliminary maps.

Mr. LaGrange stated that if no appeals to the maps are made, FEMA will send a notification and a final determination. (A six (6) month period will be allowed to formally adopt the new maps.)

Mr. LaGrange stated that changes were made to the map and several of the municipalities public notices (in 2008) were not done properly.

Mr. Hanagriff questioned whether FEMA will be receptive to same streets that have different flood zone elevations.

Mr. LaGrange explained that individuals may file an appeal upon presenting technical scientific data on the appeal.

Mr. LaGrange stated that the Parish may file an appeal based on the same type of information in order that FEMA may make a determination whether it is pertinent enough to make a change in the map.

Mr. LaGrange explained in-depth the areas that FEMA are allowing for seclusion.

Mr. LaGrange stated that seclusions are certain areas on the map that the Parish has proposed to seclude from the preliminary map; i.e. the City of Morgan City. (The City will continue to operate under the existing effective (FIRM) maps.)

FEMA will reevaluate the area by using the LAMP process which evaluates all features that may provide flood protection or hurricane surge protection.

Mr. LaGrange stated that the areas that the Parish secluded are: the Atchafalaya River to the Wax Lake Outlet and areas west of the Wax Lake Outlet up to the Charenton Drainage Canal.

Mr. Metz requested that advertisements of the Public Hearing be published in the Daily Iberian for residents on the western part of St. Mary Parish. (FEMA's notice is published only in the official journal of the Parish.)

Mr. Metz also requested that Mr. LaGrange meet with George Mikhael, Public Works Director regarding the Sorrell Park project.

Mr. LaGrange informed that a contract will be signed in the near future and work will begin after that time.

Mr. Bierhorst moved that the Advisory Budget/Finance Committee Report, November 11, 2015 and the Public Hearing Report, November 11, 2015 be approved. Dr. Tregle seconded the motion, which carried.

Mr. Bierhorst introduced the following ordinance:

ORDINANCE NO.

An Ordinance amending Ordinance No. 1994 setting the salary of the Clerk of the Council of St. Mary Parish, Louisiana.

BE IT ORDAINED by the St. Mary Parish Council in regular session convened:

SECTION I: The salary of the Clerk of the Parish Council is hereby fixed at the sum of $25.45 per hour, plus any other benefits generally applicable to employees of the Parish Council of St. Mary.

SECTION II: Any law or ordinances in conflict herewith are hereby repealed. This ordinance is to become effective January 1, 2016.

This ordinance having been offered and read on this the 18th day of November 2015; having been published in accordance with law.

THE REMAINDER OF THIS PAGE IF INTENTIONALLY LEFT BLANK!

Mr. Bierhorst introduced the following ordinance:

ORDINANCE NO.

An Ordinance amending and re-enacting Ordinance No. 2016 adopting the 2015 Combined Budgets of Revenues and Expenditures for the Parish of St. Mary, State of Louisiana.

BE IT ORDAINED, by the St. Mary Parish Council, that the following 2015 Combined Budgets of Revenues and Expenditures are hereby adopted and that all amounts appropriated for all accounts shall not exceed the amounts fixed therefor in the Budget of Expenditures; the Administration shall notify the Council within 30 days of a budget account fluctuation of five percent (5%) below revenues or five percent (5%) over in expenditures and the necessary budget amendments shall be made:

GENERAL FUND
FUND 001

		AMENDED
Estimated beginning balance 1/1/15	$1,760,552	
Anticipated Revenues:		
3100. TAXES	3,743,000	3,747,200
3200. LICENSES & PERMITS	917,650	
3300. INTERGOVERNMENTAL REVENUE	1,559,365	2,132,617
3400. FEES, CHARGES, & COMMISSIONS FOR SERVICES	466,575	375,870
3500. FINES & FORFEITURES	6,500	
3600. USE OF MONEY & PROPERTY	93,200	111,964
3700. MISCELLANEOUS REVENUES	196,088	884,665
3800. OTHER FINANCING SOURCES	4,590,209	
TOTAL ANTICIPATED REVENUES	11,572,587	12,766,675
TOTAL FUNDS AVAILABLE	13,333,139	14,527,227
Anticipated Expenditures:		
4000. GENERAL GOVERNMENT	6,756,009	6,828,187
4100. PUBLIC SAFETY	511,951	535,951
4300. HEALTH & WELFARE	1,033,539	1,067,105
4500. CULTURE & RECREATION	1,013,671	1,035,671
4850. OTHER FINANCING USES	2,271,000	2,486,000
TOTAL ANTICIPATED EXPENDITURES	11,586,170	11,952,914
FUND BALANCE ENDING	$1,746,969	$2,574,313

WITNESS FEE FUND
FUND 020

		AMENDED
Estimated beginning balance 1/1/15	$76,102	
Anticipated Revenues:		
3400. FEES, CHARGES, & COMMISSIONS FOR SERVICES	60,000	68,000
TOTAL ANTICIPATED REVENUES	60,000	68,000
TOTAL FUNDS AVAILABLE	136,102	144,102
Anticipated Expenditures:		
4000. GENERAL GOVERNMENT	50,000	36,000
TOTAL ANTICIPATED EXPENDITURES	50,000	36,000
FUND BALANCE ENDING	$86,102	$108,102

JUROR COMPENSATION FUND
FUND 030

Estimated beginning balance 1/1/15	$73,363	
Anticipated Revenues:		
3400. FEES, CHARGES, & COMMISSIONS FOR SERVICES	60,000	65,000
TOTAL ANTICIPATED REVENUES	60,000	65,000
TOTAL FUNDS AVAILABLE	133,363	138,363
Anticipated Expenditures:		
4000. GENERAL GOVERNMENT	50,000	40,000
TOTAL ANTICIPATED EXPENDITURES	50,000	40,000
FUND BALANCE ENDING	$83,363	$98,363

SMP COMMUNITY GRANT
FUND 100

		AMENDED
Estimated beginning balance 1/1/15	$150,145	
Anticipated Revenues:		
3800. OTHER FINANCING SOURCES	20,000	
TOTAL ANTICIPATED REVENUES	20,000	
TOTAL FUNDS AVAILABLE	170,145	
Anticipated Expenditures:		
4200. PUBLIC WORKS	20,000	
4300. HEALTH & WELFARE	15,250	1,500
TOTAL ANTICIPATED EXPENDITURES	35,250	21,500
FUND BALANCE ENDING	$134,895	$148,645

GAMING RECEIPT FUND
FUND 101

Estimated beginning balance 1/1/15	$804,067	
Anticipated Revenues:		
3300. INTERGOVERNMENTAL REVENUE		250
3400. FEES, CHARGES, & COMMISSIONS FOR SERVICES	1,500,000	
3600. USE OF MONEY & PROPERTY	1,000	
TOTAL ANTICIPATED REVENUES	1,501,000	1,501,250
TOTAL FUNDS AVAILABLE	2,305,067	2,305,317
Anticipated Expenditures:		
4000. GENERAL GOVERNMENT	300,188	
4100. PUBLIC SAFETY	243,900	
4200. PUBLIC WORKS	8,000	
4300. HEALTH & WELFARE	109,500	
4500. CULTURE & RECREATION	90,000	168,213
4850. OTHER FINANCING USES	891,326	
TOTAL ANTICIPATED EXPENDITURES	1,642,914	1,721,127
FUND BALANCE ENDING	$662,153	$584,190

ROAD CONSTRUCTION & MAINTENANCE
FUND 102

		AMENDED
Estimated beginning balance 1/1/15	$6,127,717	
Anticipated Revenues:		
3300. INTERGOVERNMENTAL REVENUE	7,314,720	6,814,720
3600. USE OF MONEY & PROPERTY	2,500	
3700. MISCELLANEOUS REVENUES		18,564
TOTAL ANTICIPATED REVENUES	7,317,220	6,835,784
TOTAL FUNDS AVAILABLE	13,444,937	12,963,501
Anticipated Expenditures:		
4200. PUBLIC WORKS	5,200,323	5,016,941
4850. OTHER FINANCING USES	5,215,000	5,575,000
TOTAL ANTICIPATED EXPENDITURES	10,415,323	10,591,941
FUND BALANCE ENDING	$3,029,614	$2,371,560

SANITATION
FUND 108

Estimated beginning balance 1/1/15	$1,412,551	
Anticipated Revenues:		
3100. TAXES	2,800,000	2,640,000
3300. INTERGOVERNMENTAL REVENUE	128,500	148,500
3400. FEES, CHARGES, & COMMISSIONS FOR SERVICES	1,370,000	
3600. USE OF MONEY & PROPERTY	6,000	11,000
TOTAL ANTICIPATED REVENUES	4,304,500	4,169,500
TOTAL FUNDS AVAILABLE	5,717,051	5,582,051
Anticipated Expenditures:		
4100. PUBLIC SAFETY	312,991	
4200. PUBLIC WORKS	2,285,000	2,260,000
4300. HEALTH AND WELFARE	64,700	
4850. OTHER FINANCING USES	2,160,000	
TOTAL ANTICIPATED EXPENDITURES	4,822,691	4,797,691
FUND BALANCE ENDING	$894,360	$784,360

BOAT LANDING PERMIT FUND
FUND 111

		AMENDED
Estimated beginning balance 1/1/15	$42,355	
Anticipated Revenues:		
3200. LICENSES & PERMITS	20,000	27,000
TOTAL ANTICIPATED REVENUES	20,000	27,000
TOTAL FUNDS AVAILABLE	62,355	69,355
Anticipated Expenditures:		
4500. CULTURE & RECREATION		22,000
TOTAL ANTICIPATED EXPENDITURES	-0-	22,000
FUND BALANCE ENDING	$62,355	$47,355

LAWRENCE J. MICHEL, JR. MEMORIAL
(BAYOU BOUEF) BOAT LANDING FUND
FUND 113

Estimated beginning balance 1/1/15	$1,583	
Anticipated Revenues:		
3400. FEES, CHARGES, & COMMISSIONS FOR SERVICES	1,000	500
TOTAL ANTICIPATED REVENUES	1,000	500
TOTAL FUNDS AVAILABLE	2,583	2,083
Anticipated Expenditures:		
4500. CULTURE & RECREATION	1,000	-0-
TOTAL ANTICIPATED EXPENDITURES	1,000	-0-
FUND BALANCE ENDING	$1,583	$2,083

JOE C. RUSSO BOAT LANDING FUND
FUND 114

		AMENDED
Estimated beginning balance 1/1/15	$24,951	
Anticipated Revenues:		
3400. FEES, CHARGES, & COMMISSIONS FOR SERVICES	4,000	2,000
TOTAL ANTICIPATED REVENUES	4,000	2,000
TOTAL FUNDS AVAILABLE	28,951	26,951
Anticipated Expenditures:		
4500. CULTURE & RECREATION	12,223	7,223
TOTAL ANTICIPATED EXPENDITURES	12,223	7,223
FUND BALANCE ENDING	$16,728	$19,728

JESSE FONTENOT MEMORIAL
(BERWICK) BOAT LANDING FUND
FUND 115

Estimated beginning balance 1/1/15	$38,363	
Anticipated Revenues:		
3400. FEES, CHARGES, & COMMISSIONS FOR SERVICES	5,000	6,800
TOTAL ANTICIPATED REVENUES:	5,000	6,800
TOTAL FUNDS AVAILABLE	43,363	45,163
Anticipated Expenditures:		
4500. CULTURE & RECREATION	35,000	6,000
TOTAL ANTICIPATED EXPENDITURES	35,000	6,000
FUND BALANCE ENDING	$8,363	$39,163

AMELIA BOAT LANDING FUND
FUND 116

		AMENDED
Estimated beginning balance 1/1/15	$111,106	
Anticipated Revenues:		
3400. FEES, CHARGES, & COMMISSIONS FOR SERVICES	7,500	
TOTAL ANTICIPATED REVENUES	7,500	
TOTAL FUNDS AVAILABLE	118,606	
Anticipated Expenditures:		
4500. CULTURE & RECREATION	100,000	10,000
TOTAL ANTICIPATED EXPENDITURES	100,000	10,000
FUND BALANCE ENDING	$18,606	$108,606

QUINTANA BOAT LANDING FUND
FUND 117

Estimated beginning balance 1/1/15	$10,980	
Anticipated Revenues:		
3400. FEES, CHARGES, & COMMISSIONS FOR SERVICES	5,000	6,200
TOTAL ANTICIPATED REVENUES	5,000	6,200
TOTAL FUNDS AVAILABLE	15,980	17,180
Anticipated Expenditures:		
4500. CULTURE & RECREATION	8,000	
TOTAL ANTICIPATED EXPENDITURES	8,000	
FUND BALANCE ENDING	$7,980	$9,180

JESSE B. HAYES, JR. MEMORIAL BOAT LANDING
FUND 118

		AMENDED
Estimated beginning balance 1/1/15	$40,967	
Anticipated Revenues:		
3400. FEES, CHARGES, & COMMISSIONS FOR SERVICES	2,000	
TOTAL ANTICIPATED REVENUES	2,000	
TOTAL FUNDS AVAILABLE	42,967	
Anticipated Expenditures:		
4500. CULTURE & RECREATION	35,000	5,000
TOTAL ANTICIPATED EXPENDITURES	35,000	5,000
FUND BALANCE ENDING	$7,967	$37,967

LOCAL LAW ENFORCEMENT BLOCK GRANT #2
FUND 121

Estimated beginning balance 1/1/15	($1,233)
Anticipated Revenues:	
3300. INTERGOVERNMENTAL REVENUE	11,694
TOTAL ANTICIPATED REVENUES	11,694
TOTAL FUNDS AVAILABLE	10,461
Anticipated Expenditures:	
4000. GENERAL GOVERNMENT	10,252
4800. OTHER FINANCING USES	209
TOTAL ANTICIPATED EXPENDITURES	10,461
FUND BALANCE ENDING	-0-

BURGUIERES BOAT LANDING FUND
FUND 124

		AMENDED
Estimated beginning balance 1/1/15	$19,002	
Anticipated Revenues:		
3400. FEES/CHARGES & COMMISSION	1,500	
TOTAL ANTICIPATED REVENUES	1,500	
TOTAL FUNDS AVAILABLE	20,502	
Anticipated Expenditures:		
4500. CULTURE & RECREATION	15,000	5,000
TOTAL ANTICIPATED EXPENDITURES	15,000	5,000
FUND BALANCE ENDING	$5,502	$15,502

WARDS 5 & 8 SALES TAX
FUND 125

Estimated beginning balance 1/1/15	$944,541	
Anticipated Revenues:		
3100. TAXES	330,000	318,000
3600. USE OF MONEY & PROPERTY	200	
TOTAL ANTICIPATED REVENUES	330,200	318,200
TOTAL FUNDS AVAILABLE	1,274,741	1,262,741
Anticipated Expenditures:		
4000. GENERAL GOVERNMENT	3,300	
4100. PUBLIC SAFETY	19,000	
4200. PUBLIC WORKS	82,000	
4500. CULTURE & RECREATION	185,300	
4850. OTHER FINANCING USES	25,000	75,000
TOTAL ANTICIPATED EXPENDITURES	314,600	364,600
FUND BALANCE ENDING	$960,141	$898,141

WARDS 1,2,3,4,7, & 10 SALES TAX
FUND 129

		AMENDED
Estimated beginning balance 1/1/15	$900,484	
Anticipated Revenues:		
3100. TAXES	400,000	382,000
3600. USE OF MONEY & PROPERTY	200	
TOTAL ANTICIPATED REVENUES	400,200	382,200
TOTAL FUNDS AVAILABLE	1,300,684	1,282,684
Anticipated Expenditures:		
4100. PUBLIC SAFETY	96,523	105,148
4200. PUBLIC WORKS	173,000	193,000
4300. HEALTH & WELFARE	56,000	92,200
4500. CULTURE & RECREATION	396,040	309,290
4800. OTHER FINANCING USES	5,000	
TOTAL ANTICIPATED EXPENDITURES	726,563	704,638
FUND BALANCE ENDING	$574,121	$578,046

16TH JUDICIAL DISTRICT ST. MARY PARISH DRUG COURT
FUND 157

Estimated beginning balance 1/1/15	-0-
Anticipated Revenues:	
3300. INTERGOVERNMENTAL REVENUE	1,060,000
TOTAL ANTICIPATED REVENUES	1,060,000
TOTAL FUNDS AVAILABLE	1,060,000
Anticipated Expenditures:	
4300. HEALTH & WELFARE	1,060,000
TOTAL ANTICIPATED EXPENDITURES	1,060,000
FUND BALANCE ENDING	-0-

16TH JUDICIAL DISTRICT ST. MARY PARISH DRUG COURT
FEE FUND – FUND 158

		AMENDED A
Estimated beginning balance 1/1/15	$153,385	
Anticipated Revenues:		
3400. FEES, CHARGES, & COMMISSIONS FOR SERVICES	28,000	60,000
TOTAL ANTICIPATED REVENUES	28,000	60,000
TOTAL FUNDS AVAILABLE	181,385	213,385
Anticipated Expenditures:		
4300. HEALTH & WELFARE	12,000	103,000
TOTAL ANTICIPATED EXPENDITURES	12,000	103,000
FUND BALANCE ENDING	$169,385	$110,385

JOB READINESS PROGRAM
FUND 162

Estimated beginning balance 1/1/15	$75,563	
Anticipated Revenues:		
3300. INTERGOVERNMENTAL REVENUE	18,784	
3600. USE OF MONEY & PROPERTY		17
TOTAL ANTICIPATED REVENUES	18,784	18,801
TOTAL FUNDS AVAILABLE	94,347	94,364
Anticipated Expenditures:		
4300. HEALTH & WELFARE	73,000	76,230
TOTAL ANTICIPATED EXPENDITURES	73,000	76,230
FUND BALANCE ENDING	$21,347	$18,134

DWI COURT
FUND 163

	AMENDED
Estimated beginning balance 1/1/15	($8,858)
Anticipated Revenues:	
3300. INTERGOVERNMENTAL REVENUE	71,088
TOTAL ANTICIPATED REVENUES	71,088
TOTAL FUNDS AVAILABLE	62,230
Anticipated Expenditures:	
4300. HEALTH & WELFARE	45,010
TOTAL ANTICIPATED EXPENDITURES	45,010
FUND BALANCE ENDING	$17,220

DWI COURT – PATIENT FEE FUND
FUND 164

Estimated beginning balance 1/1/15	$11,122
Anticipated Revenues:	
3400. FEES, CHARGES, & COMMISSIONS FOR SERVICES	4,745
TOTAL ANTICIPATED REVENUES	4,745
TOTAL FUNDS AVAILABLE	15,867
Anticipated Expenditures:	
4300. HEALTH & WELFARE	8,100
TOTAL ANTICIPATED EXPENDITURES	8,100
FUND BALANCE ENDING	$7,767

OJP ENHANCEMENT GRANT FUND
FUND 165

		AMENDED
Estimated beginning balance 1/1/15	($1,549)	
Anticipated Revenues:		
3300. INTERGOVERNMENTAL REVENUE	18,666	
TOTAL ANTICIPATED REVENUES	18,666	
TOTAL FUNDS AVAILABLE	17,117	
Anticipated Expenditures:		
4300. HEALTH & WELFARE	15,665	
TOTAL ANTICIPATED EXPENDITURES	15,665	
FUND BALANCE ENDING	$1,452	

JAIL OPERATING AND MAINTENANCE
FUND 190

Estimated beginning balance 1/1/15	$56,678	
Anticipated Revenues:		
3100. TAXES	1,100,000	880,000
3400. FEES, CHARGES & COMMISSIONS FOR SERVICES	266,000	
3800. OTHER FINANCING SOURCES	1,687,500	
TOTAL ANTICIPATED REVENUES:	3,053,500	2,833,500
TOTAL FUNDS AVAILABLE	3,110,178	2,890,178
Anticipated Expenditures:		
4100. PUBLIC SAFETY	2,393,000	2,229,100
4850. OTHER FINANCING USES	449,818	
TOTAL ANTICIPATED EXPENDITURES	2,842,818	2,678,918
FUND BALANCE ENDING	$267,360	$211,260

SALES TAX BOND & INTEREST SINKING
FUND 224
DEBT SERVICE

		AMENDED
Estimated beginning balance 1/1/15	$1,511,928	
Anticipated Revenues:		
3100. TAXES	1,915,000	1,825,000
3600. USE OF MONEY & PROPERTY	650	
TOTAL ANTICIPATED REVENUES:	1,915,650	1,825,650
TOTAL FUNDS AVAILABLE	3,427,578	3,337,578
Anticipated Expenditures:		
4750. DEBT SERVICE	533,757	
4850. OTHER FINANCING USES	1,650,000	
TOTAL ANTICIPATED EXPENDITURES	2,183,757	
FUND BALANCE ENDING	$1,243,821	$1,153,821

SALES TAX BOND RESERVE FUND
FUND 225
DEBT SERVICE

Estimated beginning balance 1/1/15	$1,020,359
Anticipated Revenues:	
3600. USE OF MONEY & PROPERTY	350
TOTAL ANTICIPATED REVENUES:	350
TOTAL FUNDS AVAILABLE	1,020,709
Anticipated Expenditures:	
TOTAL ANTICIPATED EXPENDITURES	-0-
FUND BALANCE ENDING	$1,020,709

3/4% SALES TAX BOND RESERVE
FUND 227
DEBT SERVICE

		AMENDED
Estimated beginning balance 1/1/15	$809,297	
Anticipated Revenues:		
3600. USE OF MONEY & PROPERTY	1,200	
TOTAL ANTICIPATED REVENUES:	1,200	
TOTAL FUNDS AVAILABLE	810,497	
Anticipated Expenditures:		
4800. OTHER FINANCING USES		110,430
TOTAL ANTICIPATED EXPENDITURES	-0-	110,430
FUND BALANCE ENDING	$810,497	$700,067

3/4% SALES TAX BOND SINKING
FUND 228
DEBT SERVICE

Estimated beginning balance 1/1/15	$516,759	
Anticipated Revenues:		
3800. OTHER FINANCING SOURCES	735,000	
TOTAL ANTICIPATED REVENUES	735,000	
TOTAL FUNDS AVAILABLE	1,251,759	
Anticipated Expenditures:		
4750. DEBT SERVICE	733,430	
4800. OTHER FINANCING USES	110,430	-0-
TOTAL ANTICIPATED EXPENDITURES	843,860	733,430
FUND BALANCE ENDING	$407,899	$518,329

SMP LIBRARY GENERAL OBLIGATION 1996 SINKING
FUND 229
DEBT SERVICE

		AMENDED
Estimated beginning balance 1/1/15	$819,596	
Anticipated Revenues:		
3100. TAXES	500,000	
3600. USE OF MONEY & PROPERTY	1,000	
TOTAL ANTICIPATED REVENUES	501,000	
TOTAL FUNDS AVAILABLE	1,320,596	
Anticipated Expenditures:		
4750. DEBT SERVICE	316,745	
TOTAL ANTICIPATED EXPENDITURES	316,745	
FUND BALANCE ENDING	$1,003,851	

SMP JAIL SINKING FUND 1999
FUND 230
DEBT SERVICE

Estimated beginning balance 1/1/15	$454,935
Anticipated Revenues:	
3600. USE OF MONEY & PROPERTY	100
3800. OTHER FINANCING SOURCE	428,398
TOTAL ANTICIPATED REVENUES:	428,498
TOTAL FUNDS AVAILABLE	883,433
Anticipated Expenditures:	
4750. DEBT SERVICE	421,739
TOTAL ANTICIPATED EXPENDITURES	421,739
FUND BALANCE ENDING	$461,694

EXCESS REVENUE BOND SINKING FUND
FUND 234
DEBT SERVICE

		AMENDED
Estimated beginning balance 1/1/15	$35,060	
Anticipated Revenues:		
3600. USE OF MONEY & PROPERTY	100	
3800. OTHER FINANCING SOURCES	1,333,826	
TOTAL ANTICIPATED REVENUES	1,333,926	
TOTAL FUNDS AVAILABLE	1,368,986	
Anticipated Expenditures:		
4750. DEBT SERVICE	1,333,430	
TOTAL ANTICIPATED EXPENDITURES	1,333,430	
FUND BALANCE ENDING	$35,556	

SMP JAIL RESERVE FUND
FUND 235
DEBT SERVICE

Estimated beginning balance 1/1/15	$98,589
Anticipated Revenues:	
3800. OTHER FINANCING SOURCES	21,420
TOTAL ANTICIPATED REVENUES	21,420
TOTAL FUNDS AVAILABLE	120,009
Anticipated Expenditures:	
TOTAL ANTICIPATED EXPENDITURES	-0-
FUND BALANCE ENDING	$120,009

SOLID WASTE BOND RESERVE, 2004 FUND
FUND 236
DEBT SERVICE

AMENDED	
Estimated beginning balance 1/1/15	$1,293,614
Anticipated Revenues:	
3600. USE OF MONEY & PROPERTY	2,500
TOTAL ANTICIPATED REVENUES	2,500
TOTAL FUNDS AVAILABLE	1,296,114
Anticipated Expenditures:	
4850. OTHER FINANCING USES	2,500
TOTAL ANTICIPATED EXPENDITURES	2,500
FUND BALANCE ENDING	$1,293,614

SOLID WASTE BOND SINKING 2004 FUND
FUND 237
DEBT SERVICE

Estimated beginning balance 1/1/15	$911,930
Anticipated Revenues:	
3800. OTHER FINANCING SOURCES	1,377,500
TOTAL ANTICIPATED REVENUES	1,377,500
TOTAL FUNDS AVAILABLE	2,289,430
Anticipated Expenditures:	
4750. DEBT SERVICE	1,228,712
TOTAL ANTICIPATED EXPENDITURES	1,228,712
FUND BALANCE ENDING	$1,060,718

SOLID WASTE DEPRECIATION & CONTINGENCY FUND
FUND 238
DEBT SERVICE

		AMENDED
Estimated beginning balance 1/1/15	$387,888	
Anticipated Revenues:		
3600. USE OF MONEY & PROPERTY	100	
3800. OTHER FINANCING SOURCES	38,000	
TOTAL ANTICIPATED REVENUES	38,100	
TOTAL FUNDS AVAILABLE	425,988	
Anticipated Expenditures:		
TOTAL ANTICIPATED EXPENDITURES	-0-	
FUND BALANCE ENDING	$425,988	

SOLID WASTE POST-CLOSURE CARE FUND
FUND 239
DEBT SERVICE

Estimated beginning balance 1/1/15	$2,574,674
Anticipated Revenues:	
3600. USE OF MONEY & PROPERTY	2,000
3800. OTHER FINANCING SOURCES	380,000
TOTAL ANTICIPATED REVENUES	382,000
TOTAL FUNDS AVAILABLE	2,956,674
Anticipated Expenditures:	
TOTAL ANTICIPATED EXPENDITURES	-0-
FUND BALANCE ENDING	$2,956,674

SMALL ANIMAL CONTROL
FUND 404
PROPRIETARY/ENTERPRISE

		AMENDED
Estimated beginning balance 1/1/15	$73,417	
Anticipated Revenues:		
3200. LICENSES AND PERMITS	3,000	
3400. FEES, CHARGES, & COMMISSIONS FOR SERVICES	154,300	124,300
3800. OTHER FINANCING SOURCES	180,000	
TOTAL ANTICIPATED REVENUES	337,300	307,300
TOTAL FUNDS AVAILABLE	410,717	380,717
Anticipated Expenditures:		
4000. GENERAL GOVERNMENT	326,817	292,317
TOTAL ANTICIPATED EXPENDITURES	326,817	292,317
FUND BALANCE ENDING	$83,900	$88,400

SOLID WASTE REDUCTION & RESOURCE FACILITY
FUND 406
PROPRIETARY/ENTERPRISE

Estimated beginning balance 1/1/15	$9,670,776	
Anticipated Revenues:		
3200. LICENSES & PERMITS	1,200	
3400. FEES, CHARGES, & COMMISSIONS FOR SERVICES	3,665,000	3,530,000
3600. USE OF MONEY & PROPERTY	3,000	
3800. OTHER FINANCING USES		11,925
TOTAL ANTICIPATED REVENUES	3,669,200	3,546,125
TOTAL FUNDS AVAILABLE	13,339,976	13,216,901
Anticipated Expenditures:		
4000. GENERAL GOVERNMENT	3,761,733	3,743,733
4850. OTHER FINANCING USES	868,000	
TOTAL ANTICIPATED EXPENDITURES	4,629,733	4,611,733
FUND BALANCE ENDING	$8,710,243	$8,605,168

KEMPER WILLIAMS PARK FUND
FUND 409
PROPRIETARY/ENTERPRISE

		AMENDED
Estimated beginning balance 1/1/15	$2,429,753	
Anticipated Revenues:		
3300. INTERGOVERNMENTAL REVENUE	15,000	
3400. FEES, CHARGES, & COMMISSIONS FOR SERVICES	155,950	102,950
3700. MISCELLANEOUS REVENUES	45,000	30,000
3800. OTHER FINANCING SOURCES	706,000	
TOTAL ANTICIPATED REVENUES	921,950	853,950
TOTAL FUNDS AVAILABLE	3,351,703	3,283,703
Anticipated Expenditures:		
4000. GENERAL GOVERNMENT	740,265	800,065
TOTAL ANTICIPATED EXPENDITURES	740,265	800,065
FUND BALANCE ENDING	$2,611,438	$2,483,638

This Ordinance shall become effective upon adoption.

This Ordinance having been offered and read on this the 18th day of November, 2015; having been published in accordance with law.

THE REMAINDER OF THIS PAGE IS INTENTIONALLY LEFT BLANK!

Mr. Bierhorst introduced the following ordinance:

ORDINANCE NO.

An ordinance authorizing the President of St. Mary Parish to execute the First Amendment to Lease Agreement with New Cingular Wireless PCS, LLC, a Delaware limited liability company, successor by merger to BellSouth Mobility LLC d/b/a Cingular Wireless.

BE IT ORDAINED by the St. Mary Parish Council, in regular session convened:

SECTION 1. The Parish of St. Mary entered into a Lease Agreement with BellSouth Mobility, LLC, a Georgia LLC, d/b/a Cingular Wireless dated August 25, 2003 for property described as follows:

Available rooftop with an area of approximately 300 sq. ft., atop the St. Mary Parish Courthouse, 500 Main Street, Franklin, LA 70538, along with such space as is needed for the wireless equipment with a separate antenna mounting area with associated allowance for connection of the equipment to the antenna.

SECTION 2. The St. Mary Parish Council does hereby authorize the President to amend said agreement and execute the First Amendment to Lease Agreement with New Cingular Wireless PCS, LLC, a Delaware limited liability company, successor by merger to BellSouth Mobility LLC d/b/a Cingular Wireless on the terms and conditions as contained in the amendment, a copy of which is attached hereto and made apart hereof.

SECTION 3. All ordinances or parts of ordinances in conflict herewith are hereby repealed.

This ordinance shall become effective upon adoption.

This ordinance having been offered and read on this 18th day of November, 2015; having been published in accordance with law.

Exhibit "A"

Market: Gulf Coast (LA)
Cell Site Number: _____
Cell Site Name: Franklin
Fixed Asset Number: 10036366

FIRST AMENDMENT TO LEASE AGREEMENT

THIS FIRST AMENDMENT TO LEASE AGREEMENT ("**First Amendment**"), dated as of the latter of the signature dates below, is by and between the St. Mary Parish Government ("**Lessor**"), represented herein by Paul P. Naquin, Jr., Parish President, as authorized by an Ordinance of the St. Mary Parish Council, whose address is 500 Main Street, Fifth Floor. Franklin, LA 70538 and New Cingular Wireless PCS, LLC, a Delaware limited liability company, having a mailing address of 575 Morosgo Drive, Atlanta, GA 30324, successor by merger to BellSouth Mobility LLC d/b/a Cingular Wireless ("**Lessee**").

WHEREAS, Lessor and Lessee's predecessor in interest entered into a certain Lease Agreement dated August 25, 2003 (the "**Lease**") whereby Lessor leased to Lessee certain Leased Property, therein described, that are a portion of the property located at 500 Main Street, Franklin, LA 70538; and

WHEREAS, Lessor and Lessee desire to amend the Lease to allow for the installation of additional antennas, associated cables and other communications instruments (collectively, the "**Additional Equipment**"); and

WHEREAS, Lessor and Lessee desire to adjust the rent in conjunction with the modifications to the Lease contained herein; and

WHEREAS, Lessor and Lessee desire to amend the Lease to update Lessee's notice address; and

WHEREAS, Lessor and Lessee, in their mutual interest, wish to amend the Lease as set forth below accordingly.

NOW THEREFORE, in consideration of the foregoing and other good and valuable consideration, the receipt and sufficiency of which are hereby acknowledged, Lessor and Lessee agree as follows:

1. **Additional Equipment.** Lessor consents to the modification of Lessee's Leased Property and installation and operation of the Additional Equipment, for a permitted equipment configuration as more completely described on attached Exhibit 1. Lessor's execution of this First Amendment will signify Lessor's approval of Exhibit 1.

2. **Rent.** Commencing on the first day of the month following the date that Lessee commences installation of the Additional Equipment (the "**Rent Commencement Date**"), Rent shall be increased by Six Hundred and no/100 Dollars ($600.00) per month, subject to adjustments as provided in the Lease.

3. **Notices.** Article 2(P) of the Lease is hereby amended to reflect Lessee's current notice address as follows:

If to Lessee: New Cingular Wireless PCS, LLC
Attn: Network Real Estate Administration
Re: Cell Site #: _____; Cell Site Name: Franklin (LA)
Fixed Asset No: 10036366
575 Morosgo Dr.
Atlanta, GA 30324

With the required copy of legal notice sent to Lessee at the address above, a copy to the Legal Department:

New Cingular Wireless PCS, LLC
Attn: Legal Department,
Re: Cell Site #: _____; Cell Site Name: Franklin (LA)
Fixed Asset No: 10036366
208 S. Akard Street
Dallas, Texas 75202-4206

4. **Other Terms and Conditions Remain.** In the event of any inconsistencies between the Lease and this First Amendment, the terms of this First Amendment shall control. Except as expressly set forth in this First Amendment, the Lease otherwise is unmodified and remains in full force and effect. Each reference in the Lease to itself shall be deemed also to refer to this First Amendment.

5. **Capitalized Terms.** All capitalized terms used but not defined herein shall have the same meanings as defined in the Lease.

[REMAINDER OF PAGE INTENTIONALLY LEFT BLANK]
[SIGNATURES APPEAR ON THE FOLLOWING PAGE]

IN WITNESS WHEREOF, the parties have caused their properly authorized representatives to execute and seal this First Amendment on the dates set forth below.

"LESSOR"

St. Mary Parish Government

By: _____
Name: Paul P. Naquin, Jr.
Title: Parish President
Date: _____

"LESSEE"

New Cingular Wireless PCS, LLC

By: AT&T Mobility Corporation
Its: Manager

By: _____
Name: _____
Title: _____
Date: _____

LESSOR ACKNOWLEDGEMENT

STATE OF LOUISIANA
PARISH OF ST. MARY

On this ____ day of _____, 201__, before me personally appeared Paul P. Naquin, Jr. ("**Appearer**"), to me personally known, who, being by me duly sworn, did say that he is the President of St. Mary Parish Government, and said Appearer acknowledged to me, Notary, in the presence of the undersigned competent witnesses, that the foregoing instrument was signed on behalf of said parish by authority of its Parish Council, and said Appearer acknowledged said instrument to be the free act and deed of said parish.

IN WITNESS WHEREOF, Appearer has executed these presents together with me, Notary, and the undersigned competent witnesses, in the Parish and State aforesaid, on the date first above written.

WITNESSES:

_____
Name:_____

_____
Name:_____

_____
Paul P. Naquin, Jr., Parish President
Appearer

_____
Name:_____
Notary Public

(Notarial Stamp/Seal)

LESSEE ACKNOWLEDGEMENT

STATE OF _____

COUNTY OF _____

On the _____ day of _____, 201___ before me personally appeared _____, and acknowledged under oath that he/she is the _____ of AT&T Mobility Corporation, Manager of New Cingular Wireless PCS, LLC, a Delaware limited liability company, named in the attached instrument, and as such was authorized to execute this instrument on behalf of the limited liability company.

_____
Signature of Notary
Printed Name: _____
Notary Public No.: _____
My Commission Expires: _____

EXHIBIT 1

Lessee's Equipment

[SEE ATTACHED FINAL CONSTRUCTION DRAWINGS DATED 9/28/15]

Notes:

1. THIS EXHIBIT MAY BE REPLACED BY A LAND SURVEY AND/OR CONSTRUCTION DRAWINGS OF THE PREMISES ONCE RECEIVED BY LESSEE.
2. ANY SETBACK OF THE PREMISES FROM THE PROPERTY'S BOUNDARIES SHALL BE THE DISTANCE REQUIRED BY THE APPLICABLE GOVERNMENTAL AUTHORITIES.
3. WIDTH OF ACCESS ROAD SHALL BE THE WIDTH REQUIRED BY THE APPLICABLE GOVERNMENTAL AUTHORITIES, INCLUDING POLICE AND FIRE DEPARTMENTS.
4. THE TYPE, NUMBER AND MOUNTING POSITIONS AND LOCATIONS OF ANTENNAS AND TRANSMISSION LINES ARE ILLUSTRATIVE ONLY. ACTUAL TYPES, NUMBERS AND MOUNTING POSITIONS MAY VARY FROM WHAT IS SHOWN ABOVE.

THIS PAGE IS INTENTIONALLY LEFT BLANK!

LTE OVERLAY PROJECT

SITE NAME: FRANKLIN
SITE NUMBER: LAL02537
FA LOCATION CODE: 10036366
PROJECT NUMBER: 2757780160
PROJECT TYPE: LTE 3C

DRAWING INDEX

T1	TITLE SHEET
C1	ROOF PLAN & SHELTER LAYOUT
C2	BUILDING ELEVATION
C2.1	ANTENNA LAYOUT
C3	EQUIPMENT DETAILS
C3.1	EQUIPMENT DETAILS
C4.1	RFDS CONFIGURATION – ALPHA
C4.2	RFDS CONFIGURATION – BETA
C4.3	RFDS CONFIGURATION – GAMMA
C4.4	RFDS PLUMBING DIAGRAM

APPROVALS

THE FOLLOWING PARTIES HEREBY APPROVE AND ACCEPT THESE DOCUMENTS AND AUTHORIZE THE CONTRACTOR TO PROCEED WITH THE CONSTRUCTION DESCRIBED HEREIN. ALL DOCUMENTS ARE SUBJECT TO REVIEW BY THE LOCAL BUILDING DEPARTMENT AND MAY IMPOSE CHANGES OR MODIFICATIONS.

AT&T RF ENGINEER — DATE

AT&T OPERATIONS — DATE

MASTEC — DATE

TOWER OWNER — DATE

Know what's below. Call 811 before you dig.

MAP AND DIRECTIONS

DEPART LAFAYETTE, LA ON US-167 [JOHNSTON ST] (NORTH) 0.6 MI. TURN RIGHT (SOUTH) ONTO US-90 [SW EVANGELINE THROUGHWAY] 43.8 MI. KEEP RIGHT ONTO RAMP 0.4 MI. BEAR RIGHT (SOUTH) ONTO LOCAL ROAD(S) 21 YDS. TURN LEFT (EAST) ONTO LA-3211 [NORTHWEST BLVD] 0.7 MI. TURN RIGHT (SOUTH) ONTO PR-18 [CHATSWORTH RD] 0.4 MI. TURN LEFT (EAST) ONTO IBERIA ST 1.4 MI. TURN RIGHT (SOUTH) ONTO LA-182 [MAIN ST] 0.4 MI. TURN LEFT (EAST) ONTO WILSON ST 109 YDS. ARRIVE AT SITE.

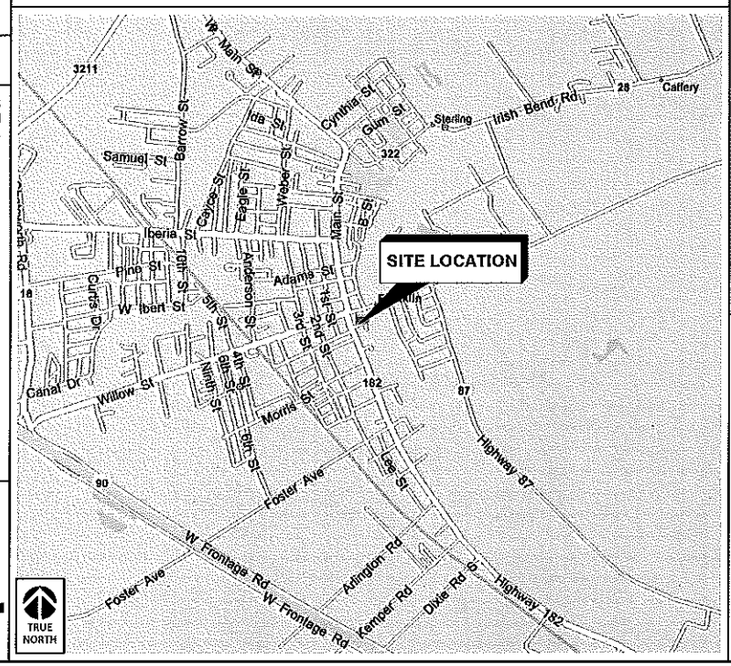

PROJECT INFORMATION

SCOPE OF WORK:	PROPOSED (3) AT&T LTE ANTENNAS (1 PER SECTOR, 3 SECTORS) IN ADDITION TO EXISTING (3) AT&T LTE ANTENNAS PROPOSED (3) AT&T LTE RRH W/(3) A2 MODULES (1 PER SECTOR, 3 SECTORS) IN ADDITION TO EXISTING (6) AT&T LTE RRH PROPOSED (2) RAYCAP SQUIDS (BETA AND GAMMA SECTORS) PROPOSED (2) DC POWER CABLES AND (2) FIBER CABLES (BETA AND GAMMA SECTORS) BETA AND GAMMA SECTORS TO BE RELOCATED TO NEW SLED MOUNTS ON ROOF
SITE ADDRESS:	500 MAIN STREET FRANKLIN, LA 70538 SAINT MARY PARISH
RFDS VERSION:	8.0
LATITUDE (NAD 83):	29.7910833°
LONGITUDE (NAD 83):	-91.4993861°
STRUCTURE TYPE:	ROOFTOP
CURRENT USE:	UNMANNED TELECOMMUNICATIONS FACILITY

CONSULTING TEAM

ENGINEER:

ARIA SERVICES, INC.
6602 HARBOR TOWN DR, UNIT 101
HOUSTON, TX 77036
CONTACT: IRSAN TISNABUDI
PHONE: 281-797-4387

APPLICANT:

at&t MOBILITY
3535 COLONNADE PKWY, SUITE #500
BIRMINGHAM, AL 35243

PROPERTY OWNER:

ST. MARY DISTRICT COURT

PLANS PREPARED FOR:
at&t MOBILITY
3535 COLONNADE PKWY, SUITE #500
BIRMINGHAM, AL 35243

PLANS PREPARED FOR:
FORESITE LLC
3975 ASBURY ROAD
BIRMINGHAM, AL 35243

PLANS PREPARED BY:
ARIA SERVICES, INC.
(281) 797-4387
www.aria-corp.com

SITE NAME:
FRANKLIN

SITE NUMBER:
LAL02537

FA LOCATION CODE:
10036366

SITE ADDRESS:
500 MAIN STREET
FRANKLIN, LA 70538
SAINT MARY PARISH

REVISION HISTORY

REV	DATE	DESCRIPTION	BY
A	05/12/15	CONSTRUCTION REVIEW	SA
0	09/28/15	CONSTRUCTION FINAL	SA

STAMP:
STATE OF LOUISIANA
MANSOUR SHIRVANI
License No. 35018
PROFESSIONAL ENGINEER
09/28/15

SHEET TITLE:
TITLE SHEET

SHEET NUMBER:
T1

SCALE IS BASED ON 22" x 34" "D" SIZE

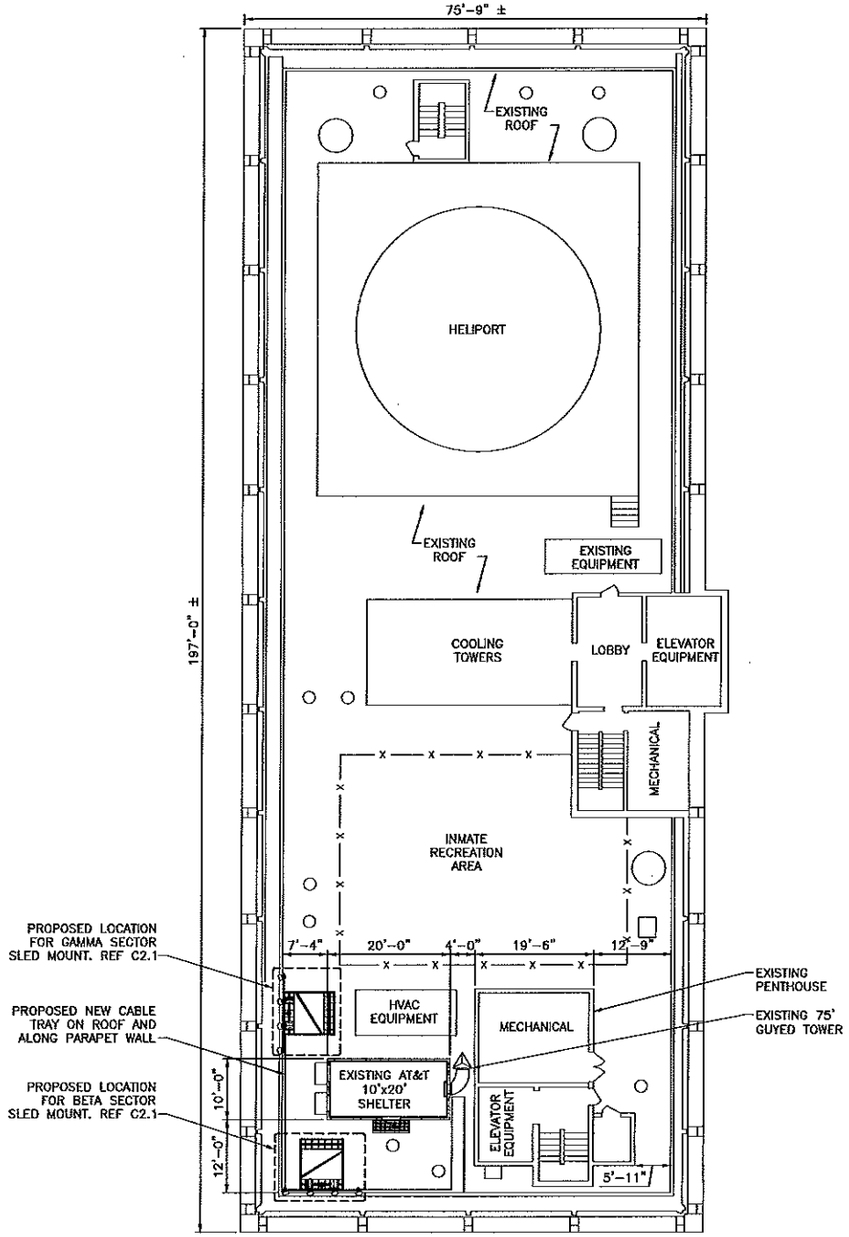

1 ROOF PLAN

SCALE: 3/32" = 1'-0"

SITE PLAN LAYOUT OBTAINED FROM A 05/11/15 SITE VISIT

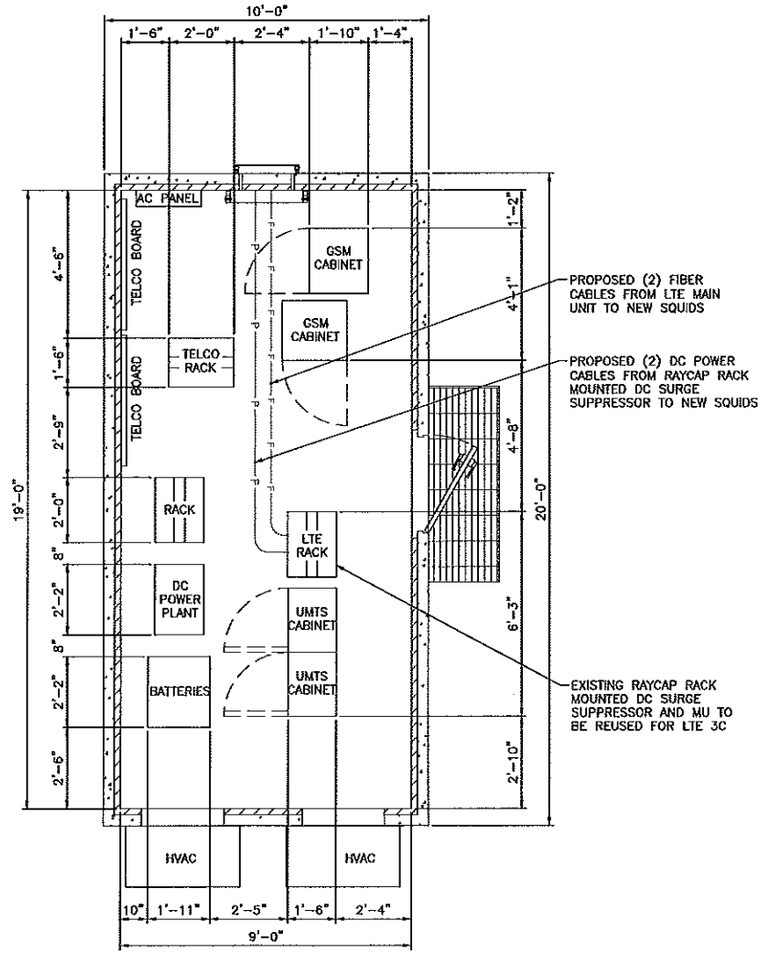

2 SHELTER LAYOUT

SCALE: 1/2" = 1'-0"

LEGEND

- EXIST. EQUIPMENT
- NEW EQUIPMENT
- NEW DC POWER CABLE
- NEW FIBER CABLE

PLANS PREPARED FOR:

at&t MOBILITY
3535 COLONNADE PKWY, SUITE #500
BIRMINGHAM, AL 35243

PLANS PREPARED FOR:

FORESITE LLC
3975 ASBURY ROAD
BIRMINGHAM, AL 35243

PLANS PREPARED BY:

ARIA SERVICES, INC.
(281) 797-4387
www.aria-corp.com

SITE NAME:
FRANKLIN

SITE NUMBER:
LAL02537

FA LOCATION CODE:
10036366

SITE ADDRESS:
500 MAIN STREET
FRANKLIN, LA 70538
SAINT MARY PARISH

REVISION HISTORY

REV	DATE	DESCRIPTION	BY
A	05/12/15	CONSTRUCTION REVIEW	SA
0	09/28/15	CONSTRUCTION FINAL	SA

STAMP:

STATE OF LOUISIANA
MANSOUR SHIRVANI
License No. 35018
PROFESSIONAL ENGINEER

09/28/15

SHEET TITLE:
ROOF PLAN & SHELTER LAYOUT

SHEET NUMBER:
C1

SCALE IS BASED ON 22" x 34" "D" SIZE

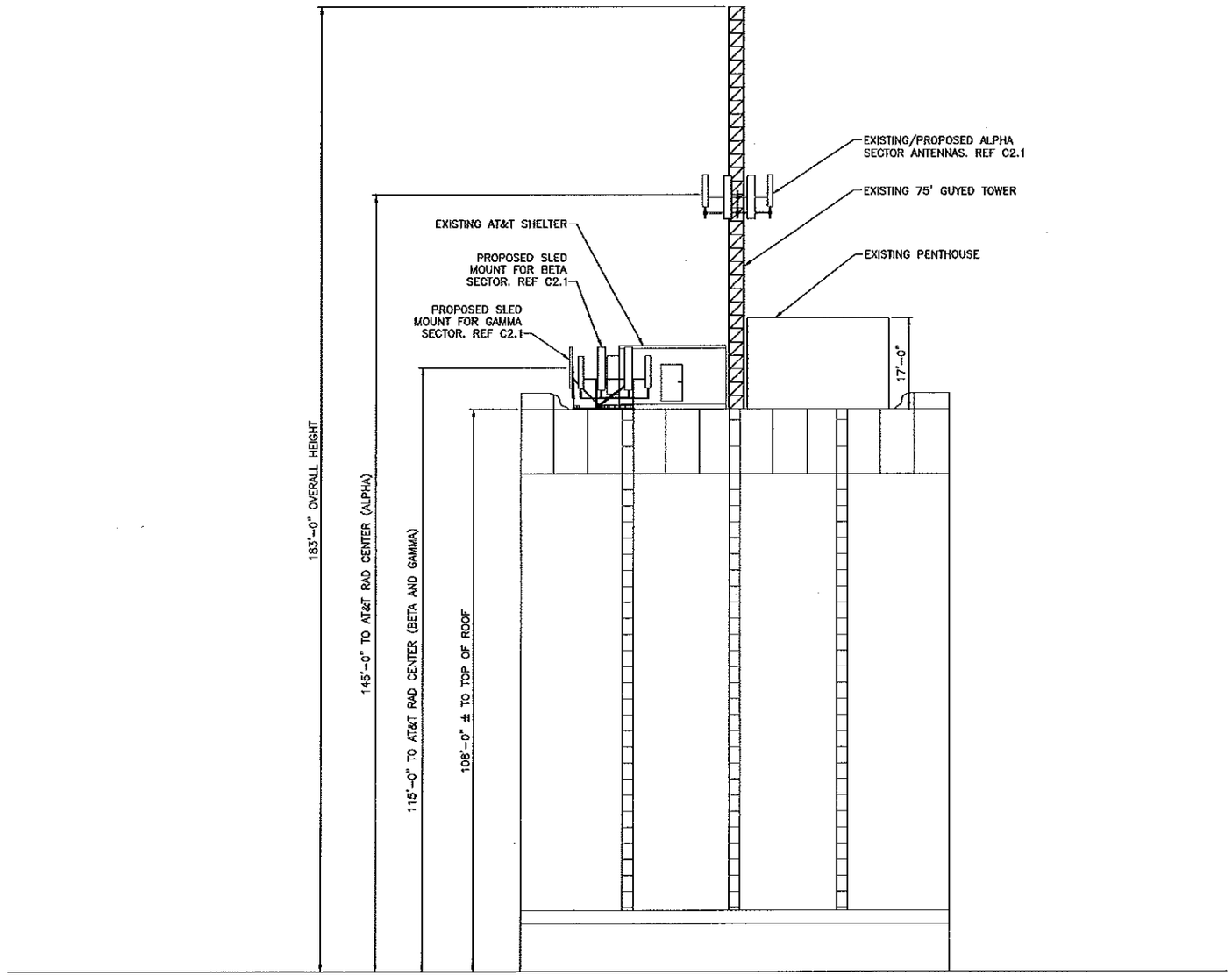

1 BUILDING ELEVATION

SCALE: NOT TO SCALE

FOR STRUCTURAL INTEGRITY OF THE TOWER, REFER TO STRUCTURAL ANALYSIS REPORT, DONE BY OTHERS.

CONTRACTOR TO REFER TO LATEST RFDS PRIOR TO CONSTRUCTION.

PLANS PREPARED FOR:

at&t MOBILITY

3535 COLONNADE PKWY, SUITE #500
BIRMINGHAM, AL 35243

PLANS PREPARED FOR:

FORESITE LLC

3975 ASBURY ROAD
BIRMINGHAM, AL 35243

PLANS PREPARED BY:

ARIA SERVICES, INC.

(281) 797-4387
www.aria-corp.com

SITE NAME:

FRANKLIN

SITE NUMBER:

LAL02537

FA LOCATION CODE:

10036366

SITE ADDRESS:

500 MAIN STREET
FRANKLIN, LA 70538
SAINT MARY PARISH

REVISION HISTORY

REV	DATE	DESCRIPTION	BY
A	05/12/15	CONSTRUCTION REVIEW	SA
0	09/28/15	CONSTRUCTION FINAL	SA

STAMP:

STATE OF LOUISIANA
MANSOUR SHIRVANI
License No. 35018
PROFESSIONAL ENGINEER

09/28/15

SHEET TITLE:

BUILDING ELEVATION

SHEET NUMBER:

C2

SCALE IS BASED ON 22" x 34" "D" SIZE

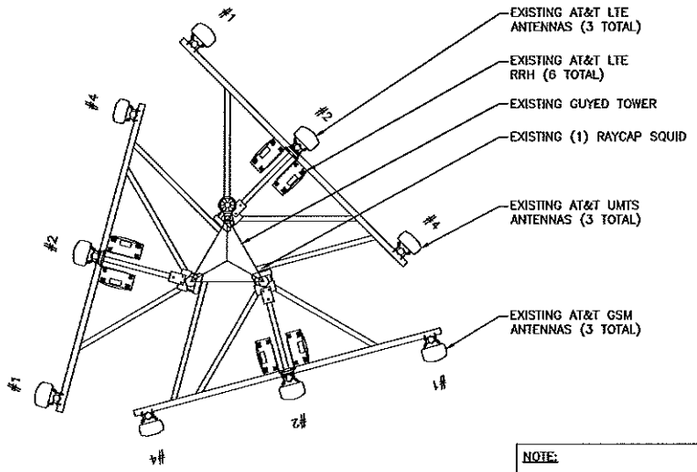

RAD CENTER

SECTOR 1 – 145'–0"
SECTOR 2 – 135'–0"
SECTOR 3 – 135'–0"

NOTE:

BETA AND GAMMA SECTORS TO BE RELOCATED NEW SLED MOUNTS

EXISTING AZIMUTHS:

GSM/UMTS:	30°, 150°, 270°
LTE:	30°, 150°, 270°

TRUE NORTH

1 EXISTING ANTENNA PLAN

SCALE: NOT TO SCALE

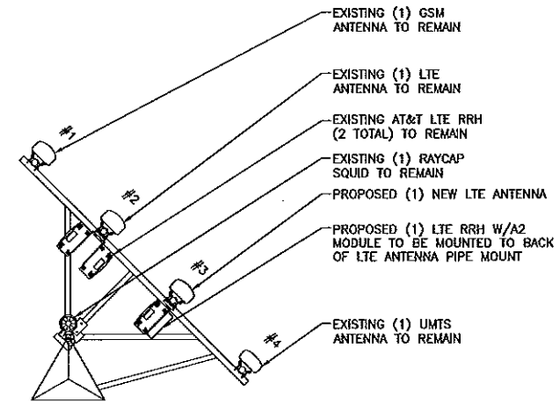

TRUE NORTH

2 PROPOSED ANTENNA PLAN (ALPHA)

RAD CENTER: 145'–0", AZIMUTH: 30°

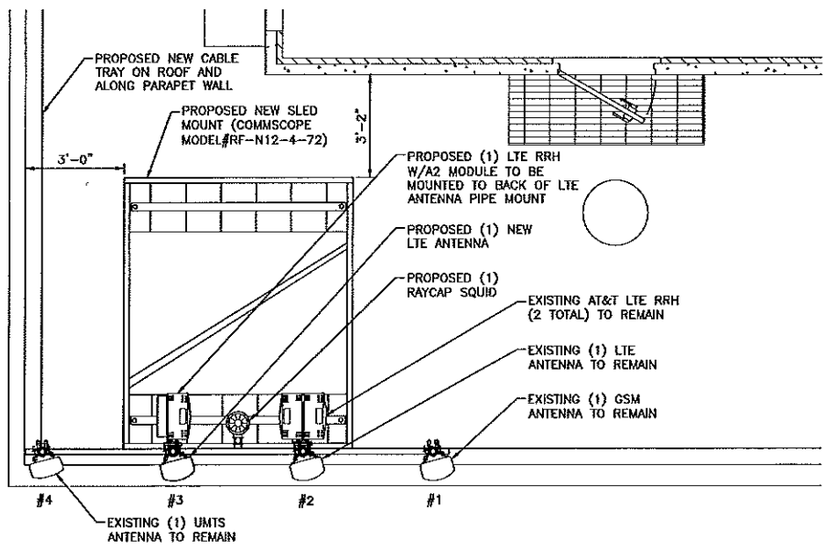

NOTE: ANTENNA POSITION NUMBERS MATCH THE RFDS CONFIGURATION TABLE. (REF C4.1, C4.2, C4.3).

TRUE NORTH

3 PROPOSED ANTENNA PLAN (BETA)

RAD CENTER: 115'–0", AZIMUTH: 150°

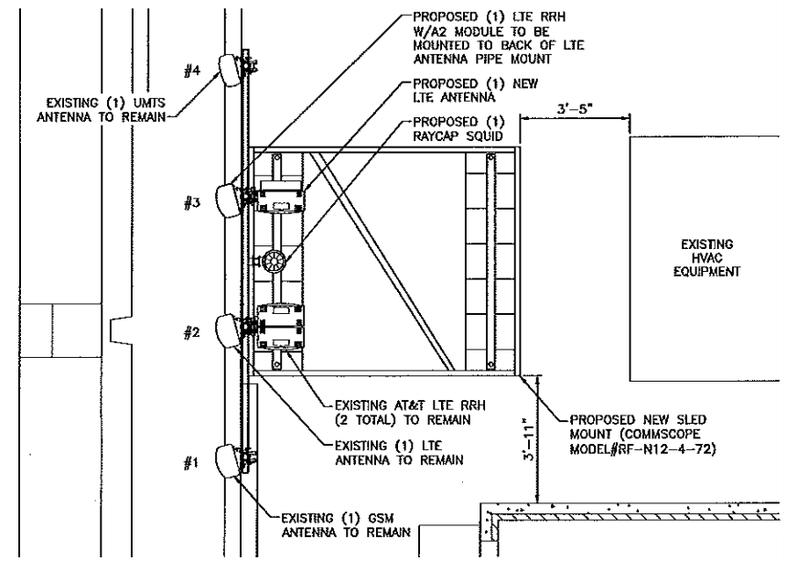

TRUE NORTH

4 PROPOSED ANTENNA PLAN GAMMA)

RAD CENTER: 115'–0", AZIMUTH: 270°

NOTE: EACH RRH UNIT MUST BE WITHIN 15 FEET OF DC SURGE SUPPRESSOR.

PLANS PREPARED FOR:

at&t MOBILITY
3535 COLONNADE PKWY, SUITE #500
BIRMINGHAM, AL 35243

PLANS PREPARED FOR:

FORESITE LLC
3975 ASBURY ROAD
BIRMINGHAM, AL 35243

PLANS PREPARED BY:

ARIA SERVICES, INC.
(281) 797-4387
www.aria-corp.com

SITE NAME:

FRANKLIN

SITE NUMBER:

LAL02537

FA LOCATION CODE:

10036366

SITE ADDRESS:

500 MAIN STREET
FRANKLIN, LA 70538
SAINT MARY PARISH

REVISION HISTORY

REV	DATE	DESCRIPTION	BY
A	05/12/15	CONSTRUCTION REVIEW	SA
0	09/28/15	CONSTRUCTION FINAL	SA

STAMP:

STATE OF LOUISIANA
MANSOUR SHIRVANI
License No. 35018
PROFESSIONAL ENGINEER

09/28/15

SHEET TITLE:

ANTENNA LAYOUT

SHEET NUMBER:

C2.1

SCALE IS BASED ON 22" x 34" "D" SIZE

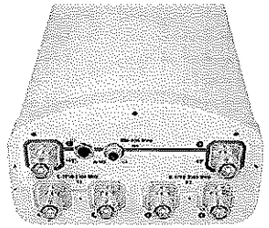

COMMSCOPE SBNHH-1D65C			
ELECTRICAL SPECIFICATIONS			
FREQUENCY BAND, MHZ	806-896	1850-1990	1920-2180
GAIN BY ALL BEAMS TILTS AVERAGE, DBI	15.6	17.8	18.2
BEAMWIDTH, HORIZONTAL, DEGREES	64	65	63
BEAMWIDTH, VERTICAL, DEGREES	7.8	5.2	5.0
INPUT POWER PER PORT, MAXIMUM, WATTS	400	350	350
POLARIZATION	±45°	±45°	±45°
IMPEDANCE	50 OHM	50 OHM	50 OHM
MECHANICAL SPECIFICATIONS			
CONNECTOR INTERFACE	7-16 DIN FEMALE		
WIND LOADING, MAX.	197.6 LBF@150 KM/H		
WIND SPEED, MAX.	150 MPH		
DIMENSIONS HxWxD	96.4"x11.9"x7.1"		
WEIGHT	49.6 LBS		

1 ANTENNA DETAILS
SCALE: NOT TO SCALE

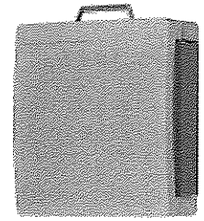

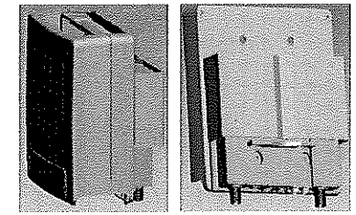

ERICSSON RRUS 11	
TECHNOLOGY	WCDMA, LTE
POWER	2 x 40 Watts
CAPABILITY	2 x 2 MIMO
MAX NUMBER OF CARRIERS	4 CARRIERS
INSTANTANEOUS BANDWIDTH	20 MHz
PHYSICAL DIMENSIONS HxWxD	17" x 17.8" x 7.2"
WEIGHT	44 lbs
POWER REQUIREMENT	-48V DC
MTBF	50 years

ERICSSON RRUS 12	
TECHNOLOGY	WCDMA, LTE
POWER	2 x 60 Watts
CAPABILITY	2 x 2 MIMO
MAX NUMBER OF CARRIERS	8 CARRIERS
INSTANTANEOUS BANDWIDTH	40 MHz (B2, B4) and 25 MHz (B5).
PHYSICAL DIMENSIONS HxWxD	20.4" x 18.5" x 7.5"
WEIGHT	50 lbs (B2 and B4), 58 lbs (B5)
HEAT DISSIPATION	530W (B2), 540W (B4), 480W (B5)
OPERATING TEMPERATURE RANGE	-40 to +131 °F
POWER REQUIREMENT	-48V DC
MTBF	50 years

ERICSSON A2 MODULE	
PHYSICAL DIMENSIONS HxWxD	16.4" x 15.2" x 3.4"
WEIGHT	22 lbs
HEAT DISSIPATION	50W
OPERATING TEMPERATURE RANGE	-40 to +131 °F
EXTERNAL CONNECTIONS	-2x 7/16 DIN ANT CONNECTIONS -POWER IN AND POWER OUT TO RRUS -EXTERNAL RET INTERFACE -2 FIBER INTERFACES

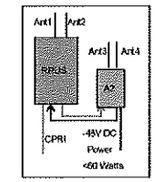

2 RRH & A2 MODULE DETAILS
SCALE: NOT TO SCALE

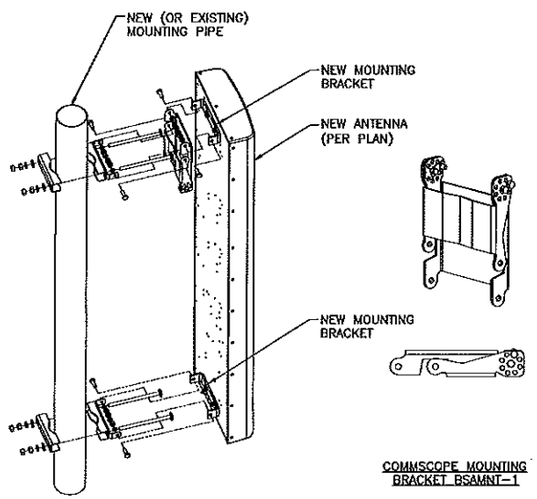

3 ANTENNA MOUNTING DETAILS
SCALE: NOT TO SCALE

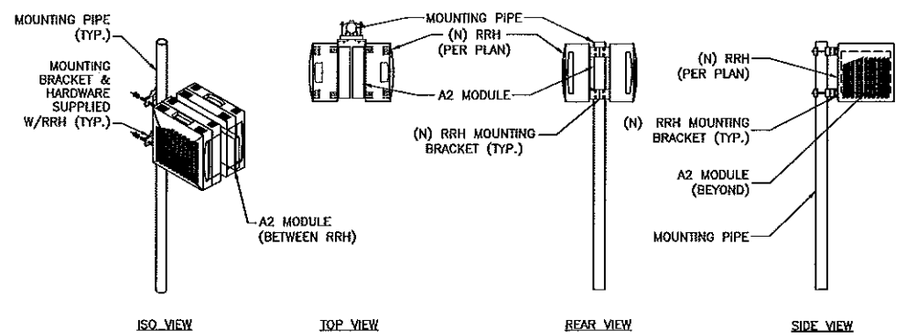

RRH MOUNTING BRACKET

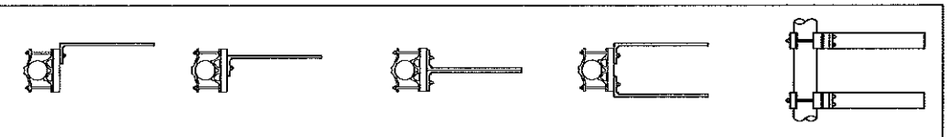

4 RRH & A2 MODULE MOUNTING DETAILS
SCALE: NOT TO SCALE

PLANS PREPARED FOR:

at&t MOBILITY
3535 COLONNADE PKWY, SUITE #500
BIRMINGHAM, AL 35243

PLANS PREPARED FOR:

FORESITE LLC
3975 ASBURY ROAD
BIRMINGHAM, AL 35243

PLANS PREPARED BY:

ARIA SERVICES, INC.
(281) 797-4387
www.aria-corp.com

SITE NAME:
FRANKLIN

SITE NUMBER:
LAL02537

FA LOCATION CODE:
10036366

SITE ADDRESS:
500 MAIN STREET
FRANKLIN, LA 70538
SAINT MARY PARISH

REVISION HISTORY

REV	DATE	DESCRIPTION	BY
A	05/12/15	CONSTRUCTION REVIEW	SA
0	09/28/15	CONSTRUCTION FINAL	SA

STAMP:

STATE OF LOUISIANA
MANSOUR SHIRVANI
License No. 35018
PROFESSIONAL ENGINEER
09/28/15

SHEET TITLE:
EQUIPMENT DETAILS

SHEET NUMBER:
C3

SCALE IS BASED ON 22" x 34" "D" SIZE

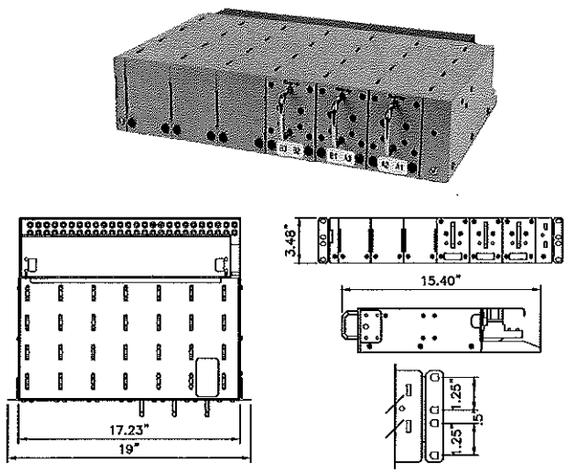

RAYCAP DC12-48-60-RM	
ELECTRICAL SPECIFICATIONS	
SURGE PROTECTIVE DEVICE TYPE:	CLASS I
MAXIMUM CONTINUOUS OPERATING VOLTAGE:	75VDC
NOMINAL OPERATING VOLTAGE:	48VDC
NOMINAL DISCHARGE CURRENT:	20kA 8/20 μs
MAXIMUM IMPULSE CURRENT:	5kA 10/350 μs
MAXIMUM DISCHARGE CURRENT:	60kA 8/20 μs
VOLTAGE PROTECTION RATING:	300V
NUMBER OF PROTECTED RADIOS:	12
MECHANICAL SPECIFICATIONS	
SUPPRESSION METHOD:	COMPRESSION LUG 2-HOLE, #10, 5/8 PITCH, 12-4 AWG
WEIGHT:	27 LBS
OPERATING TEMPERATURE:	-40°C TO +80°C
STORAGE TEMPERATURE:	-70°C TO +80°C
ENCLOSURE TYPE:	INDOOR ONLY
ENCLOSURE DIMENSION:	19"x15.4"x3.46"

1 RAYCAP DC12 (RACK MOUNTED) DETAILS

SCALE: NOT TO SCALE

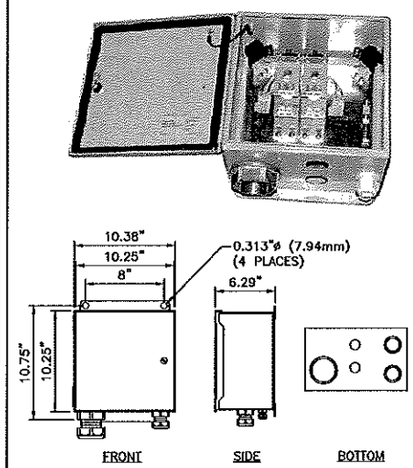

RAYCAP DC2-48-60-0-9E	
ELECTRICAL SPECIFICATIONS	
SURGE PROTECTIVE DEVICE TYPE:	TYPE 4
SURGE PROTECTIVE DEVICE CLASS:	CLASS 1
NOMINAL OPERATING VOLTAGE:	48VDC
MAXIMUM IMPULSE CURRENT:	5kA 10/350μs
MAXIMUM CONTINUOUS OPERATING VOLTAGE:	75VAC, 100VDC
NOMINAL DISCHARGE CURRENT:	30kA 8/20μs
MAXIMUM DISCHARGE CURRENT:	60kA 8/20μs
VOLTAGE PROTECTION RATING:	400V
VOLTAGE PROTECTION LEVEL:	410V
MECHANICAL SPECIFICATIONS	
SUPPRESSION METHOD:	COMPRESSION LUG
SUPPRESSION HARDWIRED:	#14 TO #2 AWG (COPPER)
WEIGHT:	16 LBS
OPERATING TEMPERATURE:	-40°C TO +80°C
STORAGE TEMPERATURE:	-70°C TO +80°C
ENCLOSURE TYPE (OUTDOOR):	NEMA 4 RATED
ENCLOSURE DIMENSION:	10.38"x11.5"x6.29"

2 RAYCAP DC2 (TOWER TOP) DETAILS

SCALE: NOT TO SCALE

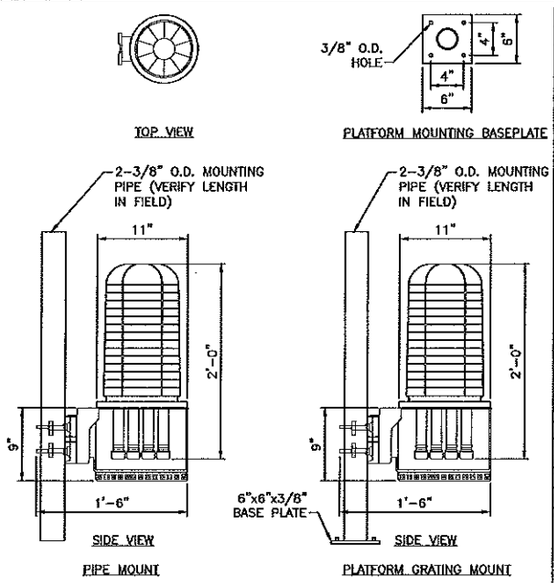

RAYCAP DC6-48-60-18-8F	
ELECTRICAL SPECIFICATIONS	
SURGE PROTECTIVE DEVICE TYPE:	CLASS I
MAXIMUM CONTINUOUS OPERATING VOLTAGE:	75VDC
NOMINAL OPERATING VOLTAGE:	48VDC
NOMINAL DISCHARGE CURRENT:	20kA 8/20 μs
MAXIMUM IMPULSE CURRENT:	5kA 10/350 μs
MAXIMUM DISCHARGE CURRENT:	60kA 8/20 μs
VOLTAGE PROTECTION RATING:	300V
NUMBER OF PROTECTED RADIOS:	6
MECHANICAL SPECIFICATIONS	
SUPPRESSION METHOD:	COMPRESSION LUG
SUPPRESSION HARWIRED:	#14 TO #2 AWG (COPPER)
FIBER CONNECTION METHOD:	LC-LC SINGLE MODE DUPLEX
ENVIRONMENTAL INGRESS PROTECTION: (IP) RATING:	IP 68, 7m 72hrs
OPERATING TEMPERATURE:	-40°C TO +80°C
STORAGE TEMPERATURE	-70°C TO +80°C
COLD TEMPERATURE CYCLING IEC 61300-2-22:	-30°C TO +60°C 200hrs @ 5 PSI
RESISTANCE TO AGGRESSIVE MATERIALS CEI IEC 61073-2:	INCLUDING ACIDS AND BASES
UV PROTECTION ISO 4892-2 METHOD A:	XENON-ARC 2160hrs
WEIGHT (INCLUDING MOUNT):	32.8 LBS
DIMENSIONS:	24"x11"x11"
COMBINED WIND LOADING:	SUSTAINED: 150MPH SUSTAINED: 105.7LBS (470N) GUST: 195MPH GUST: 213.6LBS (950N)
NOTE: DC6-48-60-0-8F HAS THE SAME SPECS AS ABOVE WITHOUT THE FIBER PAIR SUPPORT.	

3 RAYCAP DC6 (TOWER TOP) DETAILS

SCALE: NOT TO SCALE

4 NOT USED

PLANS PREPARED FOR:

at&t MOBILITY

3535 COLONNADE PKWY, SUITE #500
BIRMINGHAM, AL 35243

PLANS PREPARED FOR:

FORESITE LLC

3975 ASBURY ROAD
BIRMINGHAM, AL 35243

PLANS PREPARED BY:

ARIA SERVICES, INC.

(281) 797-4387
www.aria-corp.com

SITE NAME:

FRANKLIN

SITE NUMBER:

LAL02537

FA LOCATION CODE:

10036366

SITE ADDRESS:

500 MAIN STREET
FRANKLIN, LA 70538
SAINT MARY PARISH

REVISION HISTORY

REV	DATE	DESCRIPTION	BY
A	05/12/15	CONSTRUCTION REVIEW	SA
0	09/28/15	CONSTRUCTION FINAL	SA

STAMP:

STATE OF LOUISIANA
MANSOUR SHIRVANI
License No. 35018
PROFESSIONAL ENGINEER

09/28/15

SHEET TITLE:

EQUIPMENT DETAILS

SHEET NUMBER:

C3.1

SCALE IS BASED ON 22" x 34" "D" SIZE

Section 17A - FINAL SECTOR/CELL INFORMATION - SECTOR A (OR OMNI)

ANTENNA COMMON FIELDS	ANTENNA POSITION 1	ANTENNA POSITION 2	ANTENNA POSITION 3	ANTENNA POSITION 4	ANTENNA POSITION 5	ANTENNA POSITION 6	ANTENNA POSITION 7
ANTENNA MAKE - MODEL	80010121	SBNHH-1D65C	SBNHH-1D65C	80010121			
ANTENNA VENDOR	Kathrein 80010121	Andrew	Andrew	Kathrein 80010121			
ANTENNA SIZE (H x W x D)		98.4X11.9X7.1	98.4X11.9X7.1				
ANTENNA WEIGHT		66.1	66.1				
AZIMUTH	30	30	30	30			
MAGNETIC DECLINATION							
RADIATION CENTER (feet)	145	145	145	145			
ANTENNA TIP HEIGHT							
MECHANICAL DOWNTILT	0	0	0	0			
FEEDER AMOUNT							
Antenna RET Motor (QTY/MODEL)							
SURGE ARRESTOR (QTY/MODEL)							
DIPLEXER (QTY/MODEL)				CBC819-DF			
DUPLEXER (QTY/MODEL)							
Antenna RET CONTROL UNIT (QTY/MODEL)							
DC BLOCK (QTY/MODEL)		1 Raycap/DC6-48-60-18-8F	1 Raycap/DC6-48-60-18-8F				
TMA/LNA (QTY/MODEL)				Andrew ETB19G8-12U8 TMA			
CURRENT INJECTORS FOR TMA (QTY/MODEL)							
PDU FOR TMA8 (QTY/MODEL)							
FILTER (QTY/MODEL)							
RRH - 700 band (QTY/MODEL)		1 RRUS-11					
RRH - 850 band (QTY/MODEL)							
RRH - 1900 band (QTY/MODEL)		1 RRUS-11					
RRH - AWS band (QTY/MODEL)			1 RRUS-11+RRUS-A2				
RRH - WCS band (QTY/MODEL)							
Additional RRH #1 - any band (QTY/MODEL)							
Additional RRH #2 - any band (QTY/MODEL)							
Additional Component1 (QTY/MODEL)							
Additional Component2 (QTY/MODEL)							
Additional Component3 (QTY/MODEL)							
Local Market Note1							
Local Market Note2							
Local Market Note3							

PORT SPECIFIC FIELDS	PORT NUMBER	USID (CSSng)	USID (Atoll)	ATOLL TXID	ATOLL CELL ID	TX/RX ?	TECHNOLOGY/FREQUENCY	ANTENNA ATOLL	ANTENNA GAIN	ELECTRICAL AZIMUTH	ELECTRICAL TILT	RRH LOCATION (Top/Bottom/Integrated/None)	FEEDERS TYPE	FEEDER LENGTH (feet)	RX/AIT KIT MODULE?	TRIPLEXER or LLC (QTY)	TRIPLEXER or LLC (MODEL)	SCPA/MCPA MODULE?	HATCH/PLATE POWER (Watts)	ERP (Watts)	CABLE NUMBER	CABLE ID (CSSNG)
ANTENNA POSITION 1	PORT 1	76566.A.850.25G.1	76566.A.850.25G.1	195G2537A			GSM 850	80010121_0850MHz_P45pol_00dg	13.46			0	7/8 at 850 MHz	175.03	0	0		NO		410.77		
ANTENNA POSITION 2	PORT 1	76566.A.700.4G.1	76566.A.700.4G.1	LAL02537_7A_1			LTE 700	SBNHH-1D65C_722MHz_02DT	15.89		2	Top	FIBER	0	0	0						
	PORT 2	76566.A.1900.4G.111	76566.A.1900.4G.1	LAL02537_9A_1			LTE 1900	SBNHH-1D65C_1930MHz_01DT	17.1		1	Top	FIBER	0	0	0						
ANTENNA POSITION 3	PORT 1	76566.A.AWS.4G.111	76566.A.AWS.4G.1	LAL02537_2A_1			LTE AWS	SBNHH-1D65C_2130MHz_01DT	17.3		1	Top	FIBER	0	0	0						
ANTENNA POSITION 4	PORT 1	76566.A.850.3G.1	76566.A.850.3G.1	LALFU2537A			UMTS 850	80010121_0850MHz_P45pol_00dg	13.46			0	7/8"_850	175.04	0	0						
	PORT 2	76566.A.850.3G.2	76566.A.850.3G.2	LALFU2537A			UMTS 850	80010121_0850MHz_P45pol_00dg	13.46			0	7/8"_850	175.04	0	0						
	PORT 3	76566.A.1900.3G.1	76566.A.1900.3G.1	LALFU2537X			UMTS 1900	80010121_1920MHz_P45pol_00dg	16.34			0	7/8"_1900	175.04	0	0						
	PORT 4	76566.A.1900.3G.2	76566.A.1900.3G.2	LALFU2537X			UMTS 1900	80010121_1920MHz_P45pol_00dg	16.34			0	7/8"_1900	175.04	0	0						

PLANS PREPARED FOR:

at&t MOBILITY
3535 COLONNADE PKWY, SUITE #500
BIRMINGHAM, AL 35243

PLANS PREPARED FOR:

FORESITE LLC
3975 ASBURY ROAD
BIRMINGHAM, AL 35243

PLANS PREPARED BY:

ARIA SERVICES, INC.
(281) 797-4387
www.aria-corp.com

SITE NAME:
FRANKLIN

SITE NUMBER:
LAL02537

FA LOCATION CODE:
10036366

SITE ADDRESS:
500 MAIN STREET
FRANKLIN, LA 70538
SAINT MARY PARISH

REVISION HISTORY

REV	DATE	DESCRIPTION	BY
A	05/12/15	CONSTRUCTION REVIEW	SA
0	09/28/15	CONSTRUCTION FINAL	SA

STAMP:

SHEET TITLE:
RFDS CONFIGURATION - ALPHA

SHEET NUMBER:
C4.1

SCALE IS BASED ON 22" x 34" "D" SIZE

Section 17B - FINAL SECTOR/CELL INFORMATION - SECTOR B

ANTENNA COMMON FIELDS	ANTENNA POSITION 1	ANTENNA POSITION 2	ANTENNA POSITION 3	ANTENNA POSITION 4	ANTENNA POSITION 5	ANTENNA POSITION 6	ANTENNA POSITION 7
ANTENNA MAKE - MODEL	80010121	SBNHH-1D65C	SBNHH-1D65C	80010121			
ANTENNA VENDOR	Kathrein 80010121	Andrew	Andrew	Kathrein 80010121			
ANTENNA SIZE (H x W x D)		96.4X11.9X7.1	96.4X11.9X7.1				
ANTENNA WEIGHT		66.1	66.1				
AZIMUTH	150	150	150	150			
MAGNETIC DECLINATION							
RADIATION CENTER (feet)	115	115	115	115			
ANTENNA TIP HEIGHT							
MECHANICAL DOWNTILT	0	0	0	0			
FEEDER AMOUNT							
Antenna RET Motor (QTY/MODEL)							
SURGE ARRESTOR (QTY/MODEL)							
DIPLEXER (QTY/MODEL)				CBC819-DF			
DUPLEXER (QTY/MODEL)							
Antenna RET CONTROL UNIT (QTY/MODEL)							
DC BLOCK (QTY/MODEL)							
TMA/LNA (QTY/MODEL)				Andrew ETB19G8-12U8 TMA			
CURRENT INJECTORS FOR TMA (QTY/MODEL)							
PDU FOR TMAS (QTY/MODEL)							
FILTER (QTY/MODEL)							
RRH - 700 band (QTY/MODEL)		1 RRUS-11					
RRH - 850 band (QTY/MODEL)							
RRH - 1900 band (QTY/MODEL)		1 RRUS-11					
RRH - AWS band (QTY/MODEL)			1 RRUS-11+RRUS-A2				
RRH - WCS band (QTY/MODEL)							
Additional RRH #1 - any band (QTY/MODEL)							
Additional RRH #2 - any band (QTY/MODEL)							
Additional Component1 (QTY/MODEL)							
Additional Component2 (QTY/MODEL)							
Additional Component3 (QTY/MODEL)							
Local Market Note1							
Local Market Note2							
Local Market Note3							

PORT SPECIFIC FIELDS	PORT NUMBER	USID (CSSng)	USID (Atoll)	ATOLL TXID	ATOLL CELL ID	TX/RX ?	TECHNOLOGY/FREQUENCY	ANTENNA ATOLL	ANTENNA GAIN	ELECTRICAL AZIMUTH	ELECTRICAL TILT	RRH LOCATION (Top/Bottom/Integrated/None)	FEEDERS TYPE	FEEDER LENGTH (feet)	REAR KIT MODULE?	TRIPLEXER or LLC (QTY)	TRIPLEXER or LLC (MODEL)	SCPA/MCPA MODULE?	HATCHPLATE POWER (Watts)	ERP (Watts)	CABLE NUMBER	CABLE ID (CSSNG)
ANTENNA POSITION 1	PORT 1	76566.B.850.25G.1	76566.B.850.25G.1	195025378			GSM 850	80010121_0850MHz_P45pol_00dg	13.46			0	7/8 at 850 MHz	175.03	0	0		NO		259.17		
ANTENNA POSITION 2	PORT 1	76566.B.700.4G.111	76566.B.700.4G.1	LAL02537_7B_1			LTE 700	SBNHH-1D65C_722MHz_02DT	15.89		2	Top	FIBER	0	0	0						
	PORT 2	76566.B.1900.4G.111	76566.B.1900.4G.1	LAL02537_9B_1			LTE 1900	SBNHH-1D65C_1930MHz_01DT	17.1		1	Top	FIBER	0	0	0						
ANTENNA POSITION 3	PORT 2	76566.B.AWS.4G.111	76566.B.AWS.4G.1	LAL02537_2B_1			LTE AWS	SBNHH-1D65C_2130MHz_01DT	17.3		1	Top	FIBER	0	0	0						
ANTENNA POSITION 4	PORT 1	76566.B.850.3G.1	76566.B.850.3G.1	LALFU2537B			UMTS 850	80010121_0850MHz_P45pol_00dg	13.46			0	7/8"_850	175.04	0	0						
	PORT 2	76566.B.850.3G.2	76566.B.850.3G.2	LALFU2537B			UMTS 850	80010121_0850MHz_P45pol_00dg	13.46			0	7/8"_850	175.04	0	0						
	PORT 3	76566.B.1900.3G.1	76566.B.1900.3G.1	LALFU2537Y			UMTS 1900	80010121_1920MHz_P45pol_00dg	16.34			0	7/8"_1900	175.04	0	0						
	PORT 4	76566.B.1900.3G.2	76566.B.1900.3G.2	LALFU2537Y			UMTS 1900	80010121_1920MHz_P45pol_00dg	16.34			0	7/8"_1900	175.04	0	0						

PLANS PREPARED FOR:

at&t MOBILITY
3535 COLONNADE PKWY, SUITE #500
BIRMINGHAM, AL 35243

PLANS PREPARED FOR:

FORESITE LLC
3975 ASBURY ROAD
BIRMINGHAM, AL 35243

PLANS PREPARED BY:

ARIA SERVICES, INC.
(281) 797-4387
www.aria-corp.com

SITE NAME:
FRANKLIN

SITE NUMBER:
LAL02537

FA LOCATION CODE:
10036366

SITE ADDRESS:
500 MAIN STREET
FRANKLIN, LA 70538
SAINT MARY PARISH

REVISION HISTORY

REV	DATE	DESCRIPTION	BY
A	05/12/15	CONSTRUCTION REVIEW	SA
0	09/28/15	CONSTRUCTION FINAL	SA

STAMP:

SHEET TITLE:
RFDS CONFIGURATION - BETA

SHEET NUMBER:
C4.2

SCALE IS BASED ON 22" x 34" "D" SIZE

Section 17C - FINAL SECTOR/CELL INFORMATION - SECTOR C

ANTENNA COMMON FIELDS	ANTENNA POSITION 1	ANTENNA POSITION 2	ANTENNA POSITION 3	ANTENNA POSITION 4	ANTENNA POSITION 5	ANTENNA POSITION 6	ANTENNA POSITION 7
ANTENNA MAKE - MODEL	80010121	SBNHH-1D65C	SBNHH-1D65C	80010121			
ANTENNA VENDOR	Kathrein 80010121	Andrew	Andrew	Kathrein 80010121			
ANTENNA SIZE (H x W x D)		96.4X11.9X7.1	96.4X11.9X7.1				
ANTENNA WEIGHT		66.1	66.1				
AZIMUTH	270	270	270	270			
MAGNETIC DECLINATION							
RADIATION CENTER (feet)	115	115	115	115			
ANTENNA TIP HEIGHT							
MECHANICAL DOWNTILT	0	0	0	0			
FEEDER AMOUNT							
Antenna RET Motor (QTY/MODEL)							
SURGE ARRESTOR (QTY/MODEL)							
DIPLEXER (QTY/MODEL)				CBC919-DF			
DUPLEXER (QTY/MODEL)							
Antenna RET CONTROL UNIT (QTY/MODEL)							
DC BLOCK (QTY/MODEL)							
TMA/LNA (QTY/MODEL)				Andrew ETB19G8-12UB TMA			
CURRENT INJECTORS FOR TMA (QTY/MODEL)							
PDU FOR TMAS (QTY/MODEL)							
FILTER (QTY/MODEL)							
RRH - 700 band (QTY/MODEL)		1 RRUS-11					
RRH - 850 band (QTY/MODEL)							
RRH - 1900 band (QTY/MODEL)		1 RRUS-11					
RRH - AWS band (QTY/MODEL)			1 RRUS-11+RRUS-A2				
RRH - WCS band (QTY/MODEL)							
Additional RRH #1 - any band (QTY/MODEL)							
Additional RRH #2 - any band (QTY/MODEL)							
Additional Component1 (QTY/MODEL)							
Additional Component2 (QTY/MODEL)							
Additional Component3 (QTY/MODEL)							
Local Market Note1							
Local Market Note2							
Local Market Note3							

PORT SPECIFIC FIELDS	PORT NUMBER	USEID (CSSng)	USEID (AtoM)	ATOLL TXID	ATOLL CELL ID	TX/RX #	TECHNOLOGY/FREQUENCY	ANTENNA ATOLL	ANTENNA GAIN	ELECTRICAL AZIMUTH	ELECTRICAL TILT	RRH LOCATION (Top/Bottom/Integrated/None)	FEEDER TYPE	FEEDER LENGTH (feet)	RX/AIT KIT MODULE?	TRIPLEXER or LLC (QTY)	TRIPLEXER or LLC (MODEL)	SCPA/MCPA MODULE?	HATCHPLATE POWER (Watts)	ERP (Watts)	CABLE NUMBER	CABLE ID (CSSNG)
ANTENNA POSITION 1	PORT 1	76568.C.850.25G.1	76568.C.850.25G.1	195025370			GSM 850	80010121_0850MHz_P45pol_00dg	13.48			0	7/8 at 850 MHz	175.03	0	0		NO		259.17		
ANTENNA POSITION 2	PORT 1	76568.C.700.4G.2	76568.C.700.4G.2	LAL05537_7C_1			LTE 700	SBNHH-1D65C_722MHz_02DT	15.89		2	Top	FIBER	0	0	0						
	PORT 2	76568.C.1900.4G.222	76568.C.1900.4G.1	LAL05537_9C_1			LTE 1900	SBNHH-1D65C_1930MHz_01DT	17.1		1	Top	FIBER	0	0	0						
ANTENNA POSITION 3	PORT 1		76568.C.AWS.4G.1	LAL05537_2C_1			LTE AWS	SBNHH-1D65C_2130MHz_01DT	17.3		1	Top	FIBER	0	0	0						
ANTENNA POSITION 4	PORT 1	76568.C.850.3G.1	76568.C.850.3G.1	LALFU2537C			UMTS 850	80010121_0850MHz_P45pol_00dg	13.48			0	7/8"_850	175.04	0	0						
	PORT 2	76568.C.850.3G.2	76568.C.850.3G.2	LALFU2537C			UMTS 850	80010121_0850MHz_P45pol_00dg	13.46			0	7/8"_850	175.04	0	0						
	PORT 3	76568.C.1900.3G.1	76568.C.1900.3G.1	LALFU2537Z			UMTS 1900	80010121_1920MHz_P45pol_00dg	16.34			0	7/8"_1900	175.04	0	0						
	PORT 4	76568.C.1900.3G.2	76568.C.1900.3G.2	LALFU2537Z			UMTS 1900	80010121_1920MHz_P45pol_00dg	16.34			0	7/8"_1900	175.04	0	0						

PLANS PREPARED FOR:

at&t MOBILITY
3535 COLONNADE PKWY, SUITE #500
BIRMINGHAM, AL 35243

PLANS PREPARED FOR:

FORESITE LLC
3975 ASBURY ROAD
BIRMINGHAM, AL 35243

PLANS PREPARED BY:

ARIA SERVICES, INC.
(281) 797-4387
www.aria-corp.com

SITE NAME:
FRANKLIN

SITE NUMBER:
LAL02537

FA LOCATION CODE:
10036366

SITE ADDRESS:
500 MAIN STREET
FRANKLIN, LA 70538
SAINT MARY PARISH

REVISION HISTORY

REV	DATE	DESCRIPTION	BY
A	05/12/15	CONSTRUCTION REVIEW	SA
0	09/28/15	CONSTRUCTION FINAL	SA

STAMP:

SHEET TITLE:
RFDS CONFIGURATION - GAMMA

SHEET NUMBER:
C4.3

SCALE IS BASED ON 22" x 34" "D" SIZE

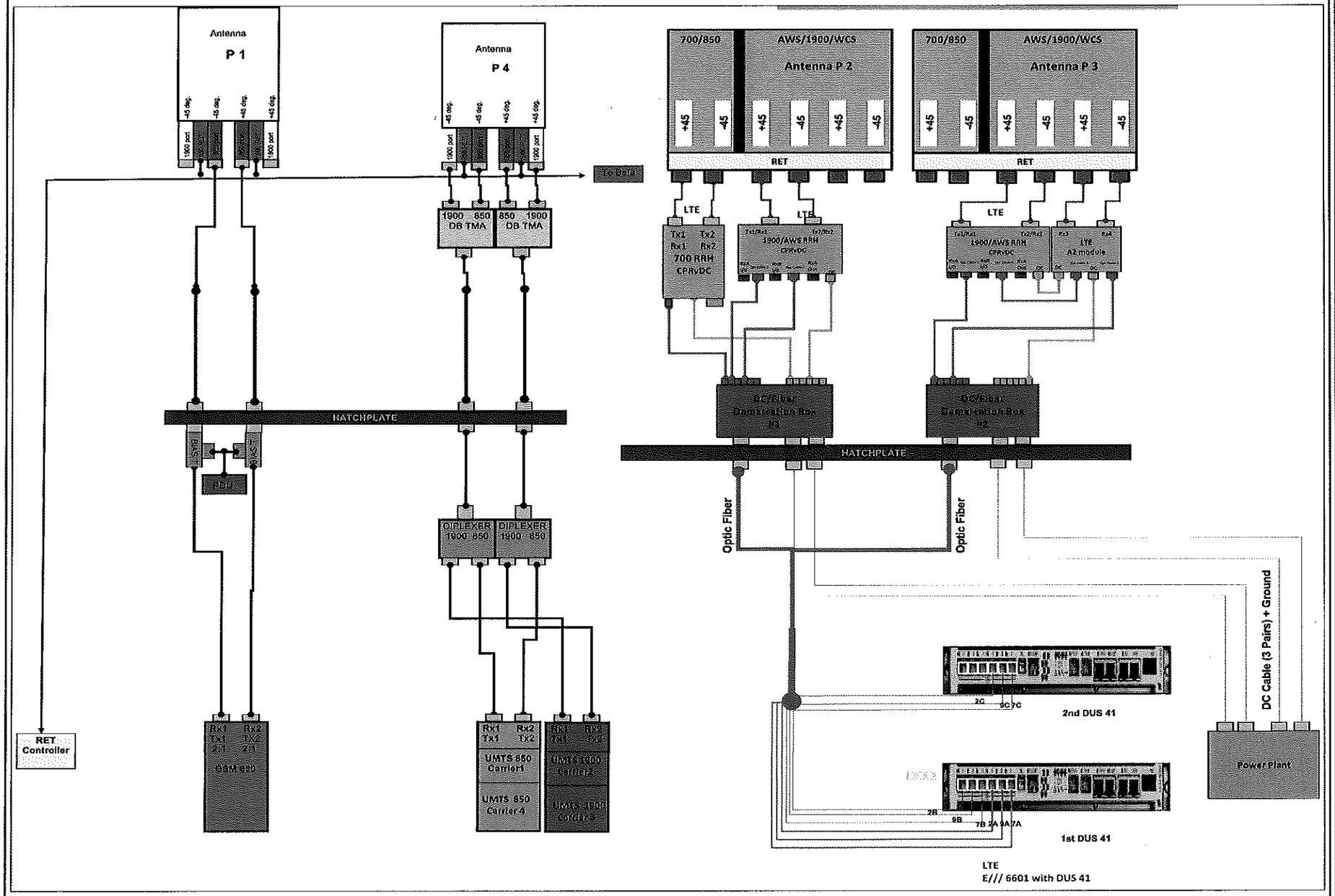

NOTE: PLUMBING DIAGRAM IS TYPICAL FOR ALL SECTORS

PLANS PREPARED FOR:

at&t MOBILITY

3535 COLONNADE PKWY, SUITE #500
BIRMINGHAM, AL 35243

PLANS PREPARED FOR:

FORESITE LLC

3975 ASBURY ROAD
BIRMINGHAM, AL 35243

PLANS PREPARED BY:

ARIA SERVICES, INC.

(281) 797-4387
www.aria-corp.com

SITE NAME:

FRANKLIN

SITE NUMBER:

LAL02537

FA LOCATION CODE:

10036366

SITE ADDRESS:

500 MAIN STREET
FRANKLIN, LA 70538
SAINT MARY PARISH

REVISION HISTORY

REV	DATE	DESCRIPTION	BY
A	05/12/15	CONSTRUCTION REVIEW	SA
0	09/28/15	CONSTRUCTION FINAL	SA

STAMP:

SHEET TITLE:

RFDS PLUMBING DIAGRAM

SHEET NUMBER:

C4.4

SCALE IS BASED ON 22" x 34" "D" SIZE

Mr. Hidalgo moved that the following ordinance be adopted. Mr. Foulcard seconded the motion, which carried by the following 10-0-0-1 Roll Call vote:

YEAS: Mr. Metz, Mrs. Middleton, Messrs. Hanagriff, Hidalgo, Singleton, Fromenthal, Dr. Tregle, Messrs. Bierhorst, Foulcard and Voisin

NAYS: None

ABSTAIN: None

ABSENT: Mr. Fryou

ORDINANCE NO. 2025

An Ordinance in compliance with Ordinance No. 1973, Chapter 5 Procedures, Division 5.4 General Procedures for Public Hearing, Section 5.4.2 Rezonings (Zoning Map Amendments).

WHEREAS, on March 12th, 2014, the St. Mary Parish Council adopted Ordinance No. 1973 – St. Mary Parish Unified Development Code, and

WHEREAS, Chapter 5 Procedures, Division 5.4 General Procedures for Public Hearing, Section 5.4.2 Rezonings (Zoning Map Amendments) provides a process for the official zoning district map to be amended, and

THEREFORE, BE IT ORDAINED by the Parish Council of the Parish of St. Mary, State of Louisiana, acting as the governing authority of the Parish of St. Mary, State of Louisiana:

SECTION I - That certain tract of land described in Exhibit "A" is hereby rezoned from the current zoning of Light Industrial (LI) Zoned District (241488001.00) and Agricultural (AG) Zoned District (2384901001.00) to Single Family (SR) Zoned District.

This ordinance shall become effective and be in full force upon publication in the official journal of the Parish.

This ordinance having been offered and read on this the 28th day of October 2015; having been published in accordance with law; and having been heard in a public hearing at Franklin, Louisiana on the 18th day of November 2015; was adopted.

APPROVED:

_____
KEVIN VOISIN, CHAIRMAN
ST. MARY PARISH COUNCIL

ATTEST:

_____
LISA C. MORGAN, CLERK
ST. MARY PARISH COUNCIL

This ordinance was submitted to the President of St. Mary Parish on this the 20th day of November 2015, at the hour of 8:10 a.m.

APPROVED:

_____
PAUL P. NAQUIN, JR., PRESIDENT
ST. MARY PARISH

This ordinance was returned to the Clerk of the Council on this the 23rd day of November 2015, at the hour of 2:40 p.m.

EXHIBIT "A"

Name: Sandra Saucier
Address: 2817 Hwy. 87, Franklin, LA

Parcel Id# Sec. 37 T14S R10E;
***-# 2384901001.00-4.*90 AC Tract "ABCDEFGHIJKLMNOPQRSTUVWXYZA" per Plat 27U 209000 being Situated in Sec. 39 T14S-R10E Acq. 195 305379 and**
***-# 2414881001.00-*37.86 AC Por Tract "ABCDEFGHIJKLMNOPQRSTUVWXYZA" per Plat 27U 209000 being situated in Sec. 37 T14S R10E Acq. 195 305379.**

PURPOSE: to construct a building on an existing slab for a Non-Profit organization

Rezone from Light Industrial (LI) Zoned District (2414881001.00) and Agricultural (AG) Zoned District (2384901001.00) to Single Family (SR) Zoned District.

Mr. Hidalgo moved that the following ordinance be adopted. Mr. Foulcard seconded the motion, which carried by the following 10-0-0-1 Roll Call vote:

YEAS: Mr. Metz, Mrs. Middleton, Messrs. Hanagriff, Hidalgo, Singleton, Fromenthal, Dr. Tregle, Messrs. Bierhorst, Foulcard and Voisin

NAYS: None

ABSTAIN: None

ABSENT: Mr. Fryou

ORDINANCE NO. 2026

An Ordinance in compliance with Ordinance No. 1973, DIVISION 5.4 General Procedures for Public Hearings, Section 5.4.3 Specific Use Permits granting a Specific Use.

WHEREAS, on March 12, 2014, the St. Mary Parish Council adopted Ordinance No. 1973 – St. Mary Parish Unified Development Code, and

WHEREAS, DIVISION 5.4 General Procedures for Public Hearings, Section 5.4.3 Specific Use Permits provides a process for the granting of a specific use, and

THEREFORE, BE IT ORDAINED by the Parish Council of the Parish of St. Mary, State of Louisiana, acting as the governing authority of the Parish of St. Mary, State of Louisiana:

SECTION I - That certain tract of land described in Exhibit "A" is hereby approved and granted a specific use for placing a Recreational Vehicle (RV) in a Single Family Residential (SR) Zoned District as allowed by Ordinance No. 2012 providing that the Specific Use shall expire within three (3) years of the date of approval; shall not be transferable; shall comply with the applicable provisions of Chapter 3, Division 3.8 Floodplain Management and Flood Protection.

This ordinance shall become effective and be in full force upon publication in the official journal of the Parish.

This ordinance having been offered and read on this 28th day of October 2015; having been published in accordance with law; and having been heard in a public hearing held at Franklin, Louisiana on the 18th day of November 2015; was adopted.

APPROVED:

_____
KEVIN VOISIN, CHAIRMAN
ST. MARY PARISH COUNCIL

ATTEST:

_____
LISA C. MORGAN, CLERK
ST. MARY PARISH COUNCIL

This Ordinance was submitted to the President of St. Mary Parish on this the 20th day of November 2015 at the hour of 8:10 a.m.

APPROVED:

_____
PAUL P. NAQUIN, JR., PRESIDENT
ST. MARY PARISH

This Ordinance was returned to the Clerk of the Council on this the 23rd day of November 2015 at the hour of 2:40 p.m.

Exhibit "A"

Name: Lynn Landry and Jarrod Landry and Justin Landry
Address: 3411 Hwy. 319, Cypremort Point, LA

Parcel Id# - Sec. 20 T15S R6E;
-1034364297.00-Lot por No. 68-D Moresi Estates Part 9 per Plat 96 291386 lying South of Hwy. 319 Acq. 303 320151 and
-1034364667.00-Lot por Hwy. 319 lying adjacent to No. 68-D Moresi Estates Part. 9 per Plat 96 291386 Acq. 303 320151.

Currently Zoned: Single Family (SR) Residential Zoned District

Specific Use Purpose: Placing a Recreational Vehicle (RV) in a Single Family Residential (SR) Zoned District as allowed by Ordinance No. 2012 providing that the Specific Use shall expire within three (3) years of the date of approval; shall not be transferable; shall comply with the applicable provisions of Chapter 3, Division 3.8 Floodplain Management and Flood Protection.

Dr. Tregle moved that the following resolutions be adopted. The Parish Council seconded the motion, which carried by the following 10-0-0-1 Roll Call vote:

YEAS: Mrs. Middleton, Messrs. Hanagriff, Hidalgo, Singleton, Fromenthal, Dr. Tregle, Messrs. Bierhorst, Foulcard, Voisin and Mr. Metz

NAYS: None

ABSTAIN: None

ABSENT: Mr. Fryou

RESOLUTION OF RESPECT

WHEREAS, the Lord Almighty in His Infinite mercy and goodness has seen fit to remove from our midst, Mr. Joseph Lee Matte, and

WHEREAS, Mr. Matte leaves behind a loving family that he shared many memories with, and

WHEREAS, the members of the St. Mary Parish Council wish to acknowledge publicly their sorrow and sympathy to the family of Mr. Matte, and

WHEREAS, the St. Mary Parish Council hopes that his family will find comfort in the thought that their grief and sorrow are shared by their friends.

NOW, THEREFORE BE IT RESOLVED, by the St. Mary Parish Council through the unanimous adoption of this resolution that they solemnly deliberate with sincere condolences, sympathy, and understanding during this time of grief.

ADOPTED AND APPROVED by the St. Mary Parish Council in regular session convened on this the 18th day of November 2015.

APPROVED:

_____
KEVIN J. VOISIN, CHAIRMAN
ST. MARY PARISH COUNCIL

ATTEST:

_____
LISA C. MORGAN, CLERK
ST. MARY PARISH COUNCIL

RESOLUTION OF RESPECT

WHEREAS, the Lord Almighty in His Infinite mercy and goodness has seen fit to remove from our midst, Mr. Merlin Raymond Price, Sr., and

WHEREAS, Mr. Price was in the law enforcement for over 40 years and served the residents of Morgan City with honesty and professional experience, and

WHEREAS, Mr. Price will be truly missed by his family and friends, and

WHEREAS, the members of the St. Mary Parish Council wish to acknowledge publicly their sorrow and sympathy to the family of Mr. Price, and

WHEREAS, the St. Mary Parish Council hopes that his family will find comfort in the thought that their grief and sorrow are shared by their friends.

NOW, THEREFORE BE IT RESOLVED, by the St. Mary Parish Council through the unanimous adoption of this resolution that they solemnly deliberate with sincere condolences, sympathy, and understanding during this time of grief.

ADOPTED AND APPROVED by the St. Mary Parish Council in regular session convened on this the 18th day of November 2015.

APPROVED:

_____
KEVIN J. VOISIN, CHAIRMAN
ST. MARY PARISH COUNCIL

ATTEST:

_____
LISA C. MORGAN, CLERK
ST. MARY PARISH COUNCIL

Mr. Bierhorst moved that the following resolutions be adopted. Mr. Foulcard seconded the motion, which carried by the following 10-0-0-1 Roll Call vote:

YEAS: Messrs. Hanagriff, Hidalgo, Singleton, Fromenthal, Dr. Tregle, Messrs. Bierhorst, Foulcard, Voisin, Metz and Mrs. Middleton

NAYS: None

ABSTAIN: None

ABSENT: Mr. Fryou

RESOLUTION

Resolution stating the Parish of St. Mary's endorsement of Berry Contracting, LP and their Project No. 20151638 – Amelia Expansion to participate in the benefits of the Louisiana Enterprise Zone Program.

WHEREAS, the Louisiana Enterprise Zone Act 901 of 1981, Act 337 of 1982, Act 433 of 1987, Act 1024 of 1992, Act 581 of 1995, and Act 624 and Act 647 of 1997, and;

WHEREAS, the Louisiana Enterprise Zone Program offers significant incentives for economic development to some of the most distressed areas in the State, and;

WHEREAS, the Louisiana Department of Economic Development designated Census Tract 401 Block Group 001 in the Parish of St. Mary, as "Enterprise Zone" or Economic Development Zone" eligible based on enabling legislation (R.S. 51.21.1787-1791) and;

WHEREAS, the Parish of St. Mary states this endorsement is in agreement with the Overall Economic Development Plan for the Parish of St. Mary, and;

WHEREAS, the attached Enterprise Zone map has been marked to show the location of the business being endorsed, and;

WHEREAS, in accordance with the Louisiana Enterprise Zone Program requirements the Parish of St. Mary agrees:

1. To participate in the Enterprise Zone Program

2. To assist the Department in evaluating progress made in any Enterprise Zone within its jurisdiction

3. To REBATE all eligible local sales/use taxes on the purchase of eligible construction materials, machinery, and equipment purchased for this project and used by the business permanently on that site.

BE IT RESOLVED, by the Parish of St. Mary in, regular and legal session convened on this the 18th day of November 2015 that Berry Contracting, LP and their project – Enterprise Zone Application No. 20151638 – Amelia Expansion is endorsed to participate in the Louisiana Enterprise Zone Program.

BE IT FURTHER RESOLVED, that if any provision or item of this resolution or the application thereof is held invalid, such invalidity shall not affect other provisions, items or applications of this resolution which can be given effect without the invalid provisions, items or applications and to this end the provisions of this resolution are hereby declared severable.

BE IT FURTHER RESOLVED, that all resolutions or parts thereof in conflict herewith are hereby repealed.

ADOPTED AND APPROVED by the St. Mary Parish Council in regular session convened on this the 18th day of November 2015.

APPROVED:

_____
KEVIN VOISIN, CHAIRMAN
ST. MARY PARISH COUNCIL

ATTEST:

_____
LISA C. MORGAN, CLERK
ST. MARY PARISH COUNCIL

RESOLUTION

Resolution stating the Parish of St. Mary's endorsement of Berry Contracting, LP and their Project No. 20151639 – Expansion to participate in the benefits of the Louisiana Enterprise Zone Program.

WHEREAS, the Louisiana Enterprise Zone Act 901 of 1981, Act 337 of 1982, Act 433 of 1987, Act 1024 of 1992, Act 581 of 1995, and Act 624 and Act 647 of 1997, and;

WHEREAS, the Louisiana Enterprise Zone Program offers significant incentives for economic development to some of the most distressed areas in the State, and;

WHEREAS, the Louisiana Department of Economic Development designated Census Tract 401 Block Group 001 in the Parish of St. Mary, as "Enterprise Zone" or Economic Development Zone" eligible based on enabling legislation (R.S. 51.21.1787-1791) and;

WHEREAS, the Parish of St. Mary states this endorsement is in agreement with the Overall Economic Development Plan for the Parish of St. Mary, and;

WHEREAS, the attached Enterprise Zone map has been marked to show the location of the business being endorsed, and;

WHEREAS, in accordance with the Louisiana Enterprise Zone Program requirements the Parish of St. Mary agrees:

1. To participate in the Enterprise Zone Program

2. To assist the Department in evaluating progress made in any Enterprise Zone within its jurisdiction

3. To REBATE all eligible local sales/use taxes on the purchase of eligible construction materials, machinery, and equipment purchased for this project and used by the business permanently on that site.

BE IT RESOLVED, by the Parish of St. Mary in, regular and legal session convened on this the 18th day of November 2015 that Berry Contracting, LP and their project – Enterprise Zone Application No. 20151639 – Expansion is endorsed to participate in the Louisiana Enterprise Zone Program.

BE IT FURTHER RESOLVED, that if any provision or item of this resolution or the application thereof is held invalid, such invalidity shall not affect other provisions, items or applications of this resolution which can be given effect without the invalid provisions, items or applications and to this end the provisions of this resolution are hereby declared severable.

BE IT FURTHER RESOLVED, that all resolutions or parts thereof in conflict herewith are hereby repealed.

ADOPTED AND APPROVED by the St. Mary Parish Council in regular session convened on this the 18th day of November 2015.

APPROVED:

_____
KEVIN VOISIN, CHAIRMAN
ST. MARY PARISH COUNCIL

ATTEST:

_____
LISA C. MORGAN, CLERK
ST. MARY PARISH COUNCIL

RESOLUTION

A resolution authorizing Paul P. Naquin, Jr., the President of the Parish of St. Mary to execute a contract with Lemoine Industrial Group, LLC relative to the Shredder Building Enhancements (Phase I and II) – Harold J. "Babe" Landfill, Berwick, Louisiana.

BE IT RESOLVED, that Paul P. Naquin, Jr., President of the Parish of St. Mary, be and he is hereby authorized and directed, for and on behalf of the Parish Council, to execute a contract with Lemoine Industrial Group, LLC, 24870 Hwy. 405, Plaquemine, Louisiana 70764 relative to the Shredder Building Enhancements (Phase I and II) – Harold J. "Babe" Landfill, Berwick, Louisiana, with said Agreement to contain such terms, conditions and stipulations as he may best see fit, he being fully authorized in the premises.

ADOPTED AND APPROVED by the St. Mary Parish Council in regular session convened on this the 18th day of November 2015.

APPROVED:

_____
KEVIN VOISIN, CHAIRMAN
ST. MARY PARISH COUNCIL

ATTEST:

_____
LISA C. MORGAN, CLERK
ST. MARY PARISH COUNCIL

RESOLUTION

A resolution authorizing Paul P. Naquin, Jr., the President of the Parish of St. Mary to execute a contract with Eagle Fence 1 Company, LLC relative to the Fence and Gate Removal and Installation – St. Mary Parish West End Pickup Station, Franklin, Louisiana.

BE IT RESOLVED, that Paul P. Naquin, Jr., President of the Parish of St. Mary, be and he is hereby authorized and directed, for and on behalf of the Parish Council, to execute a contract with Eagle Fence 1 Company, LLC, 725 California Street, Berwick, Louisiana 70342 relative to the Fence and Gate Removal and Installation – St. Mary Parish West End Pickup Station, Franklin, Louisiana, with said Agreement to contain such terms, conditions and stipulations as he may best see fit, he being fully authorized in the premises.

ADOPTED AND APPROVED by the St. Mary Parish Council in regular session convened on this the 18th day of November 2015.

APPROVED:

_____
KEVIN VOISIN, CHAIRMAN
ST. MARY PARISH COUNCIL

ATTEST:

_____
LISA C. MORGAN, CLERK
ST. MARY PARISH COUNCIL

RESOLUTION

A resolution providing for the approval and authorization for Change Order No. 3 for Proposed Roadway and Drainage Improvements to Jones Drive.

WHEREAS, a certain contract has been entered into between the St. Mary Parish Council and Byron E. Talbot Contractor, Inc., P.O. Box 5658, Thibodaux, Louisiana 70302, relative to Proposed Roadway and Drainage Improvements to Jones Drive, and

WHEREAS, the items as shown on Change Order No. 3 will result in a decrease of $4,756.64 in the contract price and an increase of one (1) working day in the contract time.

NOW, THEREFORE BE IT RESOLVED, that the St. Mary Parish Council does hereby approve the issuance of Change Order No. 3 covering a decrease of $4,756.64 in the contract price and an increase of one (1) working day in the contract time for Proposed Roadway and Drainage Improvements to Jones Drive.

BE IT FURTHER RESOLVED, that the President of St. Mary Parish, Paul P. Naquin, Jr., be and he is hereby authorized to execute Change Order No. 3 on behalf of the St. Mary Parish Council.

ADOPTED AND APPROVED by the St. Mary Parish Council in regular session convened on this the 18th day of November 2015.

APPROVED:

_____
KEVIN VOISIN, CHAIRMAN
ST. MARY PARISH COUNCIL

ATTEST:

_____
LISA C. MORGAN, CLERK
ST. MARY PARISH COUNCIL

RESOLUTION OF ACCEPTANCE

A resolution authorizing and directing the President to execute for and on behalf of the Parish of St. Mary, a Certificate of Substantial Completion from Byron E. Talbot Contractor, Inc. relative to Proposed Roadway and Drainage Improvements to Jones Drive.

WHEREAS, Byron E. Talbot Contractor, Inc., P.O. Box 5658, Thibodaux, Louisiana 70302, has substantially completed Proposed Roadway and Drainage Improvements to Jones Drive Project.

NOW THEREFORE, BE IT RESOLVED by the Parish of St. Mary that the President be and he is hereby empowered, authorized and directed to execute a Certificate of Substantial Completion for and on behalf of the Parish of St. Mary accepting Proposed Roadway and Drainage Improvements to Jones Drive Project.

BE IT FURTHER RESOLVED, that he be authorized and directed to have a copy of said Certificate of Substantial Completion recorded in the mortgage records of St. Mary Parish, Louisiana.

ADOPTED AND APPROVED by the St. Mary Parish Council in regular session convened on this the 18th day of November 2015.

APPROVED:

_____
KEVIN VOISIN, CHAIRMAN
ST. MARY PARISH COUNCIL

ATTEST:

_____
LISA C. MORGAN, CLERK
ST. MARY PARISH COUNCIL

RESOLUTION

A resolution authorizing Paul P. Naquin, Jr., the President of the Parish of St. Mary to execute a contract with Byron E. Talbot Contractor, Inc. relative to the Crescent Acres Concrete Joint Repair Project.

BE IT RESOLVED, that Paul P. Naquin, Jr., President of the Parish of St. Mary, be and he is hereby authorized and directed, for and on behalf of the Parish Council, to execute a contract with Byron E. Talbot Contractor, Inc., P. O. Box 5658, Thibodaux, Louisiana 70302 relative to the Crescent Acres Concrete Joint Repair Project, with said Agreement to contain

such terms, conditions and stipulations as he may best see fit, he being fully authorized in the premises.

ADOPTED AND APPROVED by the St. Mary Parish Council in regular session convened on this the 18th day of November 2015.

APPROVED:

_____
KEVIN VOISIN, CHAIRMAN
ST. MARY PARISH COUNCIL

ATTEST:

_____
LISA C. MORGAN, CLERK
ST. MARY PARISH COUNCIL

Mr. Bierhorst moved that the following resolution be adopted. Mr. Foulcard seconded the motion, which carried by the following 9-0-1-1 Roll Call vote:

YEAS: Messrs. Singleton, Fromenthal, Dr. Tregle, Messrs. Bierhorst, Foulcard, Voisin, Metz, Mrs. Middleton and Mr. Hanagriff

NAYS: None

ABSTAIN: Mr. Hidalgo

ABSENT: Mr. Fryou

RESOLUTION

A resolution authorizing Paul P. Naquin, Jr., the President of the Parish of St. Mary to execute a contract with Acadiane' Renovations, Ltd. relative to the Recreational and Infrastructure Improvements at Centerville Park – FP & C Project No. 50-J51-13-02.

BE IT RESOLVED, that Paul P. Naquin, Jr., President of the Parish of St. Mary, be and he is hereby authorized and directed, for and on behalf of the Parish Council, to execute a contract with Acadiane' Renovations, Ltd., 15223 Hwy. 182 W, Franklin, Louisiana 70538 relative to the Recreational and Infrastructure Improvements at Centerville Park – FP & C Project No. 50-J51-13-02, with said Agreement to contain such terms, conditions and stipulations as he may best see fit, he being fully authorized in the premises.

ADOPTED AND APPROVED by the St. Mary Parish Council in regular session convened on this the 18th day of November 2015.

APPROVED:

_____
KEVIN VOISIN, CHAIRMAN
ST. MARY PARISH COUNCIL

ATTEST:

_____
LISA C. MORGAN, CLERK
ST. MARY PARISH COUNCIL

OLD BUSINESS:

A. The Advisory Budget/Finance Committee moved to recommend to the Parish Council that funds in the amount of $30,000 be allocated from Wards 1, 2, 3, 4, 7 & 10 3/10% Sales Tax Fund to replace fire hydrants and valves throughout the City of Franklin.

Mr. Hanagriff moved that the Parish Council allocate funds in the amount of $30,000 from Wards 1, 2, 3, 4, 7 & 10 3/10% Sales Tax Fund to replace fire hydrants and valves throughout the City of Franklin. Mr. Foulcard seconded the motion, which carried.

B. Mr. Stan Robison has submitted an application for consideration of appointment to the South Central Louisiana Human Services Authority (SCLHSA).

Mr. Foulcard moved that Stan Robison be appointed to the South Central Louisiana Human Services Authority (SCLHSA). Mr. Hidalgo seconded the motion, which carried.

NEW BUSINESS:

A. Spencer Aucoin, II has submitted his resignation from the St. Mary Fire Protection No. 3 and the Recreation District No. 1 Board of Commissioners and the vacancies will be advertised.

Mr. Aucoin will be forwarded a letter thanking him for his service on St. Mary Fire Protection No. 3 and the Recreation District No. 1 Board of Commissioners.

B. Kevin Ardoin, Laboratory Director, Acadiana Criminalistics Laboratory writes that the Annual Commission Meeting hosted by the Acadiana Crime Lab on Tuesday, November 10th. During the meeting, the proposed 2016 budget was approved by the Commission members present.

The budget must be approved by at least a majority of the governing authorities of the parishes which the Commission serves. Furthermore, please disclose to me the results of the meeting when the 2016 budget is presented.

Mr. Foulcard moved that the Parish Council approve the Acadiana Criminalistics Laboratory's 2016 Budget. Mr. Fromenthal seconded the motion, which carried.

C. Joyce Metoyer, Enterprise Zone Program Administrator has forwarded a copy of her letter written to Mr. James B. Leonard, Advantous Consulting, LLC relative to Berry Contracting, LP Enterprise Zone Contract #20100779-EZ acknowledging receipt of the Enterprise Zone Program Project Completion Report and issuing the following start date and ending date for Project:

#20100779-EZ – Start Date – 03/01/2012 Ending Date – 02/12/2014

D. Joyce Metoyer, Enterprise Zone Program Administrator has forwarded a copy of her letter written to Mr. James B. Leonard, Advantous Consulting, LLC relative to Twin Brothers Marine, LLC Enterprise Zone Contract #20120015-EZ acknowledging receipt of the Enterprise Zone Program Project Completion Report and issuing the following start date and ending date for Project:

#20120015-EZ – Start Date – 04/01/2012 Ending Date – 09/30/2014

E. Mr. Metz to request an allocation of $2,500 from Wards 1, 2, 3, 4, 7 & 10 3/10% Sales Tax Fund to Recreation District No. 5 for a Christmas Banquet.

Mr. Metz moved that funds in the amount of $2,500 be allocated from Wards 1, 2, 3, 4, 7 & 10 3/10% Sales Tax Fund to Recreation District No. 5 for a Christmas Banquet. Mr. Foulcard seconded the motion, which carried.

F. Appointments to the following Boards and Commissions:

Recreation District No. 1 (Amelia area) – 1 Vacancy

Melanie F. Butcher – Present Member

St. Mary Parish Tourist Commission (District 1, 2 and 3) – 1 Vacancy

Albert Kuhlman, Jr. – Present Member

Mr. Singleton moved that Melanie F. Butcher be reappointed to Recreation District No. 1 Board of Commissioners. Mrs. Middleton seconded the motion, which carried.

Mr. Foulcard moved that Albert Kuhlman, Jr. be reappointed to St. Mary Parish Tourist Commission Board of Commissioners. Mr. Metz seconded the motion, which carried.

There being no further business, Mr. Foulcard moved for adjournment. Dr. Tregle seconded the motion, which carried.

Lisa C. Morgan, Clerk

Kevin Voisin, Chairman